SILICON CHIP

MAY 2012
ISSN 1030-2662
05
PRINT POST APPROVED
- PP255003/01272
$9.30* INC GST NZ$11.90 INC GST

W22 12
SILICON CHIP MAY 12
NET 15T 25/04 1511
$9.30 CENTRE NEWS

inside
y:

AUSTRALIA'S SYNCHROTRON

WORKS WITH OVER 450 PIC & ATMEL CHIPS!

Universal micro programming adaptor board

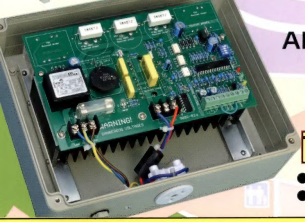

ALL THE CONSTRUCTION DETAILS:

Advanced speed controller for induction motors

- Suits single or three-phase motors
- Perfect for pool pumps: save $$$!!

ALL ABOUT ADSL How can it work?

Jaycar Electronics
Better, More Technical

MAY EDITION
Price valid until 23/05/2012

WANT A FREE COPY OF OUR 2012 CATALOGUE?

Place an order of $30 or more via our Techstore website and type "FREE CATALOGUE" in the comment box as you check-out.

Offer valid until 31/5/2012.

MEGA MAY SALE

80mm Silent Hydrodynamic Bearing Case Fan

Designed to provide additional airflow without increasing noise levels. Features balanced blades, long-life hydro-dynamic bearing and ultra-low noise making these fans perfect for a home theatre, PC, or ventilating the amplifier wedged into your entertainment unit.

- 12VDC

80mm YX-2570 $19.95
90mm YX-2572 $24.95
120mm YX-2574 $28.95

25MHz Dual Trace Digital Storage Oscilloscope

An ideal DSO for the advanced hobby user or technician and is particularly suited to audio work. Full data storage capabilities and USB interface so you can store traces on a flash drive. Includes 2 x 10:1 probes, EasyScope software, and USB cable.

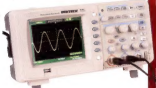

- Channels: 2
- Input impedance: 1Mohm
- Size: 310(W) x 150(H) x 130(D)mm

QC-1932

$599.00

IP67 True RMS Autoranging Cat IV DMM with Wireless USB

A quality true RMS multimeter with a wireless USB computer interface and includes logging software which allows computer based live data whilst keeping your computer completely isolated and protected. Double moulded housing and IP67 rated.

- Non-contact voltage indicator, data hold
- Backlit, auto off
- Diode test and audible continuity
- Cat IV, 600V, 4000 count
- 10A current range
- Size: 170(L) x 79(W) x 50(H)mm

QM-1571

NEW $109.00

Stereo Compressor Kit

Refer: SC Magazine Jan 2012

Compressors are useful in eliminating the extreme sound levels during TV ads, "pops" from microphones when people speak or bump / drop them, levelling signals when singers or guitarist vary their level, etc. Kit includes PCB, processed case and electronic components for 12VDC operation. 12VDC plug pack required - use MP-3147.

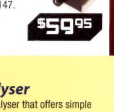

- PCB: 118 x 102mm

KC-5507

$59.95

SMD Electrolytic Capacitors

- Ideal for prototyping
- Mixed - pack of 50
- 20 values

RE-5959

NEW $12.95

SMD Tantalum Capacitors

- Ideal for prototyping
- Mixed - pack of 30
- 20 values

RZ-6618

NEW $12.95

Goot Soldering Station

This soldering station is a precision, Japanese manufactured instrument with excellent temperature stability and anti-static characteristics. It has a digital temperature adjustment from 200 to 480°C at 65W and a lightweight soldering pencil. See website or catalogue for full specifications.

- Power: 70W
- Operating voltage: 24VAC
- Control size: 146(L) x 115(W) x 98(H)mm

TS-1440 ***Was $299.00***

$249.00
SAVE $50

Semiconductor Component Analyser

Intelligent semiconductor analyser that offers simple identification and testing of a variety of 2 or 3-pin devices. Type and lead identification as well as forward voltage, test current and other parameters for transistors.

- Automatic pinout identification
- Gain and leakage current measurement for BJTs
- Silicon and germanium detection for BJTs
- Forward voltage and test current
- Size: 100(W) x 71(H) x 27(D)mm

QT-2216 ***Was $99.00***

$49.00
SAVE $50

Retractable 3m Alligator Test Lead Set

Set of 3 heavy duty red, black, and green leads on a retractable 3m reel, terminated with insulated alligator clips.

- Reel size: 152(Dia.) x 20(W)mm

WT-5334 ***Was $24.95***

$19.95
SAVE $5

KIT BACK CATALOGUE

If you can't find the kit you are looking for, try the Jaycar Kit Back Catalogue. Our central warehouse keeps a quantity of older and slow-moving kits that can no longer be held in stores. A list of kits can be found on our website. Just search for "kit back catalogue".

AVAILABLE LATE MAY!

Jaycar CATALOGUE on a Flash Drive

To order call 1800 022 888

www.jaycar.com.au

Contents

SILICON CHIP
Vol.25, No.5; May 2012 www.siliconchip.com.au

Features

14 The Australian Synchrotron
Located close to Monash University, this impressive circular, megavoltage machine enables investigators to determine the structure and composition of various materials with extremely high detail – by Dr David Maddison

22 Getting The Most From ADSL
Most of us owe our high-speed Internet access to the freakish technology of ADSL. But what exactly is it, how does it work and how do you solve slow speed problems? – by Alan Ford

Projects To Build

30 PIC/AVR Programming Adaptor Board; Pt.1
Do you often need to program microcontrollers? This board, combined with an In-Circuit Serial Programmer (ICSP), allows you to quickly program most 8-bit & 16-bit PIC microcontrollers as well as 8-bit Atmel AVRs – by Nicholas Vinen

40 High-Temperature Thermometer/Thermostat
Need to measure or control temperature over a very wide range? This compact unit hooks up to a K-type thermocouple, can measure temperatures from -50°C to +1200°C and drives a relay for thermostatic control – by John Clarke

68 1.5kW Induction Motor Speed Controller, Pt.2
Second article details the construction and testing and gives guidelines on its use – by Andrew Levido

84 SemTest Discrete Semiconductor Test Set; Pt.3
Follow this article to build and test this useful unit. We also describe how to fit a crowbar circuit to quickly discharge the HT after making high-voltage measurements – by Jim Rowe

96 Ultra-LD Mk.3 135W/Channel Stereo Amplifier, Pt.3
Third article gives the specifications & performance – by Nicholas Vinen

Special Columns

61 Serviceman's Log
The dodgy, dangerous, home-made stereo amplifier – by the Serviceman

78 Circuit Notebook
(1) PICAXE 433MHz Data Transmitter & Receiver; (2) Electronic Ballast For Fluorescent Light Fittings; (3) Air-Compressor Controller For A Sand-Blaster; (4) Motor Protector Uses Missing Pulse Detector; (5) Maximite-Based Ultrasonic Rangefinder

98 Vintage Radio
Breville 730 dual-wave 5-valve receiver – by Rodney Champness

Departments

2 Publisher's Letter
4 Mailbag
66 Product Showcase
105 Order Form
106 Ask Silicon Chip
111 Market Centre

PIC/AVR Programming Adaptor Board, Pt.1 – Page 30.

High-Temperature Thermometer/ Thermostat – Page 40.

Building the 1.5kW Induction Motor Speed Controller, Pt.2 – Page 68.

Building The SemTest Discrete Semiconductor Test Set – Page 84.

SILICON CHIP
www.siliconchip.com.au

Publisher & Editor-in-Chief
Leo Simpson, B.Bus., FAICD

Production Manager
Greg Swain, B.Sc. (Hons.)

Technical Editor
John Clarke, B.E.(Elec.)

Technical Staff
Ross Tester
Jim Rowe, B.A., B.Sc
Nicholas Vinen

Photography
Ross Tester

Reader Services
Ann Morris

Advertising Enquiries
Glyn Smith
Phone (02) 9939 3295
Mobile 0431 792 293
glyn@siliconchip.com.au

Regular Contributors
Brendan Akhurst
Rodney Champness, VK3UG
Kevin Poulter
Stan Swan
Dave Thompson

SILICON CHIP is published 12 times a year by Silicon Chip Publications Pty Ltd. ACN 003 205 490. ABN 49 003 205 490. All material is copyright ©. No part of this publication may be reproduced without the written consent of the publisher.

Printing: Hannanprint, Noble Park, Victoria.

Distribution: Network Distribution Company.

Subscription rates: $97.50 per year in Australia. For overseas rates, see the order form in this issue.

Editorial office:
Unit 1, 234 Harbord Rd,
Brookvale, NSW 2100.

Postal address: PO Box 139,
Collaroy Beach, NSW 2097.

Phone (02) 9939 3295.

Fax (02) 9939 2648.

E-mail: silicon@siliconchip.com.au

ISSN 1030-2662
Recommended and maximum price only.

Publisher's Letter

Sound levels a sore point on TV and elsewhere

It is fair to say that my recent Publisher's Letters on the topics of loud TV commercials and excessive sound levels in cinemas and theatres have triggered a lively response. We have more letters on this topic in the Mailbag pages this month and since they are still coming in, there will undoubtedly be a few more next month.

I must admit to be being baffled by some of the responses to the editorial about sound levels in theatres, coming from the people who actually do the work. One response was along the lines that before anyone should think of complaining to theatre management, they should take a series of measurements around the theatre or whatever venue is involved.

How unrealistic! One does not go to a theatre, on the one hand expecting to enjoy the entertainment, and on the other expecting to be blasted and therefore also carrying a sound level meter so one can dart around the theatre making measurements. As my daughters would say, "Get real!" or worse, "Get a life!". If one was so concerned about being blasted, that would be substantial disincentive to buying a ticket in the first place.

It seems to me that whoever is responsible for the sound levels at cinemas and elsewhere, whether it is the producer, management, disc jockey or whoever, simply does not realise that if people have to shout to communicate to the person next to them, then the sound is just too loud; no test equipment is required. That rule of thumb has been quoted by hearing experts over the decades. That it seems to be largely ignored by people who should know better is a paradox.

Mind you it also seems to me that many people are simply inured to excessive sound levels and are too timid to even think about complaining. And there is another group who are obviously well on the way to going deaf and probably need the wick wound up a bit. But still on the same theme, if people are moderately to severely deaf then it is also true that they are less able to cope with excessive sound levels; in effect, they can't hear the soft bits and can't stand the really loud bits. And inevitably there are some people at public performances who are too drunk or stupid to care.

We already know that a substantial proportion of the population is deaf and a lot of that deafness is due to being exposed to excessive sound levels. It is because so many people are deaf that most public venues also provide hearing loops so that people with hearing aids can listen to the performance. That is an even bigger paradox, isn't it? Public venues provide for deaf people and then act as though the rest of the population should also be rendered deaf!

So if we already know that a significant portion of the population is already deaf and even more people are likely to be deaf in the future, doesn't that tell us something? If the relevant authorities are ineffective at protecting the public's hearing, then individuals must act on their own behalf.

For my part, in the future I will always take earplugs with me whenever I go to a venue where sound levels are likely to be high. I do the same thing when I use noisy power tools, just as I wear eye protection. I suggest that you do the same.

Leo Simpson

SIOMAR
Battery Engineering

IRON PHOSPHATE

Lithium Iron Phosphate (LFP) is a special kind of rechargeable lithium battery that addresses the 4 major issues with current lithium technologies: Safety, Life, Power, and Environmental Friendliness. The chemistry has similar charge requirements to lead acid batteries and can therefore be more easily integrated into many lead acid applications than other chemistries.

SAFE

Lithium Iron Phosphate technology is an inherently safe battery chemistry "the safest lithium battery on the market" as shown repeatedly by independent data generated by the Department of Energy, UL, UN, Sandia National Labs and other agencies. The cells pass UN/DOT (UN38.3 transport safety testing) requirements with NO circuit board protection. This is not possible with traditional lithium chemistries.

LONG LASTING

Traditional Li-ion chemistries already typically last 5 years or 500 charge / discharge cycles before the AH capacity tapers off to 80% of what it was when the battery was new. This is a league above lead acid batteries which age dramatically with increasing temperature and it is even better than NiCd and NiMH. Lithium iron phosphate is better still, achieving up to 2000 charge discharge cycles.

POWERFUL

Cells can be optimized for long life, low or high temperature operation or high current without dramatically affecting service life. The LFP300HPS (90AH) cell can deliver over 4,200 Amps. Lithium phosphate cells can now meet even the most demanding application requirements — from starting a locomotive to powering an F1 racer, or cold starting a tractor at -20F.

CLEAN

Lithium Iron Phosphate can replace outdated battery chemistries like Lead-acid, NiCd, NiMH. They are designed to offer extremely long cycle life, high energy capacity, outstanding power performance, and quick charge times, while simultaneously being environmentally friendly.
These batteries use no harmful heavy metals and can be recycled. Use of phosphates in the system architecture reduces environmental concerns in all stages of the battery's life cycle. And given their long lasting nature, wearing one of these batteries out takes a lot longer than most other batteries in the first place.

3.2V
50AH

3.2V
90AH

12V
10AH

24V
19AH

For more information, contact

SIOMAR BATTERY ENGINEERING

Phone (08) 9302 5444 or email mark@siomar.com

www.batterybook.com

Siomar Batteries design and custom make portable Power Solutions

MAILBAG

Letters and emails should contain complete name, address and daytime phone number. Letters to the Editor are submitted on the condition that Silicon Chip Publications Pty Ltd may edit and has the right to reproduce in electronic form and communicate these letters. This also applies to submissions to "Ask SILICON CHIP" and "Circuit Notebook".

Enthused over the Atwater Kent story

This is just a short note to congratulate you on the amazing article in the March 2012 issue of SILICON CHIP on Atwater Kent. The words create excellent stories of facts and history of the man and his radios, and the restored monochrome photos are truly magnificent, with their high contrast and level of detail. You do manage to keep raising the bar!

By the way, are the radios shown on pages 98/99 actually here in Australia? The photos are beautifully done. Geez, I'd like a few of those radios if I could afford them!

I've never before seen such a beautiful display of A-K radios in print. Great work on the part of Kevin Poulter.

Graeme Dennes,
Bunyip, Vic.

Comment: Kevin took the colour photos in question. All the radios are from a private collection in Melbourne.

Doubts raised about the Induction Motor Speed Controller

With respect to the comments on the Induction Motor Speed Controller in the Publisher's Letter, (April 2012) and the admission that the 2kW Sinewave Inverter project published in the October 1992 to February 1993 issues was more complex than the VSD, I am still unsure why the delay.

Also, the third harmonic injection is not new, so while Mr Levido has done a great job, it is not his idea! But my main point is, with no dv/dt output filter, the earth currents will not be sinusoidal, even if the phase-to-phase current is. Therefore, what are you going to do about the motor bearing failures that will result? And what about the resulting possible Earth Leakage Breaker tripping problem?

Note that even an output sinewave filter will not eliminate nasty earth currents (as I have discovered via an internet Inverter/VSD forum).

Ray Hamono,
Bayswater Nth, Vic.

Comment: in response to your first question, the delay in producing the design was mainly due to our conservative approach.

We directed your other questions to the designer, Andrew Levido, for his comments, as follows:

The reader is correct in stating that the injection of third harmonic is not new. In fact the author first saw this technique used 25 years ago and it was not so new even then! The article made no claims that this was an original idea.

The high level dv/dt present in the output of induction motor speed controllers can cause a small currents to flow to earth through the capacitance between the stator windings and the earthed frame of the motor. These currents will be spiky, corresponding with the switching edges of the PWM, and not sinusoidal, but they will be symmetrical. For small motors such as those used with this project, the magnitude of these currents will be quite small.

There should not be any problems with domestic earth leakage circuit breakers which typically trip when there is an imbalance in current between the Active and Neutral lines. Despite these small current spikes, Active and Neutral currents will be balanced, so should not cause problems with earth leakage circuit breakers.

The reader also correctly suggests that AC drives have been implicated in early bearing failure in motors under some circumstances. Any potential on the rotor with respect to earth will force a current to flow via the path of least resistance. In some cases, the potential is high enough to break down the thin insulating coating of oil on the bearings causing pitting or frosting, leading to their premature failure.

This is more likely to occur in very large motors where the capacitance between stator and rotor is high but has reportedly been seen in motors as

Creating a scene in response to bedlam

At last! Someone with a voice has spoken out on my pet hate; excessive noise in theatres and live shows. For years my wife and I have complained bitterly to club managers about noisy shows in their auditoriums. We go to clubs to enjoy good company, chat with friends, enjoy good food and if possible enjoy the entertainment.

The incredible din created by most entertainers make all of the foregoing impossible! The most puzzling aspect of this whole affair is that presumably sound engineers are trained with formal qualifications and yet they do not understand the basic operation of the human ear. That is, at some point just before pain threshold, sound becomes so distorted that it is unintelligible.

Add to this the fact that this level of noise would invoke legislative punishment in any factory in Australia. As well as complaining loudly, my wife and I also remonstrate visually by twisting the ends of a full size serviettes and inserting the twisted ends into our ears!

This has a twofold effect in that it protects our ears as well as sends a very clear signal to all around us that this is not tolerable. Hopefully it also sends a message to those on stage as well as the sound engineers and club managers.

Sadly, we have had no noticeable effect on any of these people that we are aware of. However, entertainment in clubs is dying and perhaps that is in protest against a very unpleasant environment.

Keep up the good work Leo and try to get the motion picture industry to fall into line if possible.

Bob Young,
Riverwood, NSW.

small as 10kW. I are not aware of it being a problem with motors in the 2kW range where the capacitance between stator and rotor is quite small.

The problem can be eliminated by either insulating the steel bearings, using ceramic bearings or by shorting the rotor to earth via some lower-resistance path. Sometimes this occurs naturally through the load, such as in water pumps. In other cases, the shaft can be grounded via conductive plastic brushes. In other cases, the bearings are packed with conductive grease. Adding a dv/dt filter between the AC drive and the motor can also help to some extent.

Given the size and usage of the motors that will be used with this project, it is unlikely that this problem will be an issue in the domestic setting.

Background to the 18-bit DAC circuit

This is a response to the letter entitled "18-bit DAC Circuit Is Not Valid" by Phil Denniss, on pages 10 & 12 of the March 2012 issue. An explanation of the genesis of the circuit will hopefully assist understanding it.

I started by looking at the Lab-Standard 16-Bit Digital Potentiometer from the July 2010 issue of SILICON CHIP. It seemed to me that the specified 0.1% tolerance (1 in 1000) resistors are not in fact sufficiently accurate to guarantee the specified accuracy of the output voltage (1mV in 10V or 1 in 10,000), although statistically most units built would be sufficiently accurate.

This set me wondering if the digital potentiometer could be redesigned to use lower-tolerance resistors by using some kind of on-board calibration. This lead to a current-mode DAC design that used non-binary weights. The resistor values were assigned so that there was a guarantee of overlap in output voltages at the major transitions (eg, input going from 00001111

Background music is often too loud

I read Leo Simpson's comments on excessive sound levels in theatres and cinemas with great interest. But why stop there? How many of us have we watched a TV program or DVD and found the audio poorly balanced with background music or sound effects so loud that speech is partially or completely obscured?

Poor quality audio has been a bugbear of mine for years and while my experience is more with the home viewing environment, it amounts to the same thing. Enjoyment of program material is being significantly impaired because of inept or just plain lazy audio mixing methods.

Some programs seem to take this to extremes, with a flea farting two streets away being more audible than the dialogue between actors right in front of the camera. Even interviews in news broadcasts can suffer when background noise or chatter overwhelms what the reporter and interviewee are saying.

Poor microphone selection or placement and sound technicians obsessed with giving background ambience and incidental music precedence over speech seems to be the norm now.

Chris Loader,
Brisbane, Qld.

DYNE
INDUSTRIES PTY LTD
Now manufacturing the original ILP Unirange Toroidal Transformer

- In stock from 15VA to 1000VA
- Virtually anything made to order!
- Transformers and Chokes with Ferrite, Powdered Iron GOSS and Metglas cores
- Current & Potential Transformers
DYNE Industries Pty Ltd
Ph: (03) 9720 7233 Fax: (03) 9720 7551
email: sales@dyne.com.au
web: www.dyne.com.au

Mailbag: continued

to 00010000) regardless of variation within the resistors' tolerance. A precise and linear ADC, probably a delta-sigma ADC referenced to an accurate voltage source, would be used to calibrate the DAC.

Although I realised that this idea would have limited application, the concept of guaranteeing full coverage of the output voltage range using imprecise resistors with non-binary weights and the use of an ADC with feedback to create a DAC, was novel, so I submitted it to Circuit Notebook. I limited it to 11-bit operation because the current in the highest order resistor would have become excessive for more bits.

Shortly after I submitted this idea I realised that I could split the DAC to reduce the resistor currents and therefore allow operation with more than 11 bits. I also submitted this idea to Circuit Notebook but I omitted most of the details that were in the previous submission, assuming that the first item would be published. However, the editor decided to publish the second submission, not the first.

The January 2012 Circuit Notebook circuit is designed for 1% tolerance resistors (unfortunately the tolerance was not marked on the circuit diagram).

As it stands, the circuit has two flaws that affect its accuracy. First, noise in the higher-value resistors could potentially lead to output voltage fluctuations that exceed the lowest bit voltage. However, the mean value of this noise is zero so if the DAC is to be used simply as a variable precision voltage reference the noise could simply be filtered out.

Second, variations in the values of the resistors due to thermal effects could exceed the lowest bit voltage. Thermal variations due to resistor current can be eliminated by modifying the circuit so that instead of the left ends of the weighting resistors being switched between 0V and V_{DD}, the left ends are permanently connected to V_{DD} and the right ends are switched between 0V and the inverting input of op amp IC1. The current, and therefore self-heating, in each resistor is then constant regardless of whether it is in use or not. In addition, to ameliorate

Praise for Publisher's Letters

I would like to congratulate Leo Simpson for the continued great layout, depth and range of articles in the magazine plus his wisdom as displayed in Publisher's Letter. I have to say I can't remember ever disagreeing with his sentiments and expert commentary.

I particularly appreciate the fact that he goes outside electronics from time to time in order to bring a touch of sanity into populist politically-driven issues like carbon trading.

His comments on incandescent lamps and solar panels are memorable too. I was listening to an "expert" on Radio National awhile ago who stated that it takes 57 years to pay off a solar installation if the carbon emissions of manufacturing, installation and transport etc are taken into account. By then the expensive batteries may have been replaced three or four times and the panels will be completely outdated and most likely replaced years earlier than their potential lifespan.

For all of this, there would have been less of that nasty carbon dioxide in the atmosphere if the solar installations had never been installed at all!

Having said that, the notion of "free power" from the sun is very alluring but the numbers just don't add up without massive cross-subsidisation, which means people paying those subsidies have to use more energy and emit more CO_2 to earn the money to subsidise the solar industry.

When more efficient panels are developed, perhaps then renewable energy will be practical.

I worked in the coal industry for 20 years and now see a massive increase in the industry with total government support. From that, one can only conclude that the people we elect every few years, who approved these projects, are complete hypocrites when it comes to issues like carbon dioxide emissions and carbon trading.

Geoff Mattick,
Gulgong, NSW.

Comment: the cost of solar panels has now come down to the point where we believe investment by businesses and domestic consumers can now be viable, even without the benefit of green subsidies or beneficial grid-feed tariffs.

In fact, the introduction of smart meters makes such an investment more worthwhile, as the owner of such an installation can then avoid peak tariffs and also ensure power reliability during blackouts. This would assume that the installation was battery backed up to ensure power was available during blackouts at any time.

We do not accept the long payoff times quoted for solar panel manufacture. In practice, the dollar cost of the solar panel more or less reflects the actual energy input to manufacture it. If not, the manufacturers would go broke.

Industry's lowest active current for 16-bit microcontrollers

Flexible power-saving features plus on-chip LCD driver

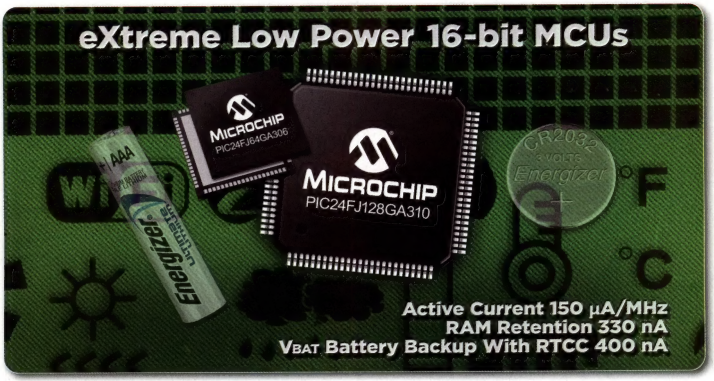

A new industry lowest active current, automatic transition from V_{DD} to V_{BAT} battery backup, and low-power sleep with RAM retention combine to help you to push battery life towards the end of your product's operational lifetime.

The combination of innovative and flexible power-saving features, an on-chip LCD driver and mTouch™ capacitive sensing on Microchip's new PIC24F 'GA3' family lets you create more power efficient and less costly battery-backed products.

As the first PIC® microcontrollers with V_{BAT} the PIC24F 'GA3' family maintains system time by automatically switching to back-up battery power when the primary V_{DD} supply is removed. This extends battery life by driving the application's real-time clock whilst drawing only 400 nA.

An industry lowest 150 µA/MHz active current for 16-bit microcontrollers is combined with a new low-power sleep mode with RAM retention down to 330 nA, and six DMA channels to cut power consumption and increase the throughput when executing routines.

Adding more informative and flexible displays is easy with the on-chip LCD display driver; whilst mTouch™ capacitive sensing, ultrasonic flow measurement and other sensor functions can be added using the on-chip Charge Time Measurement Unit (CTMU) with constant current source.

3 EASY STEPS TO ENERGY EFFICIENT DESIGNS:

1. Use new power-saving features to extend battery life
2. Add mTouch™ capacitive sensing, flow measurement or other sensor functions
3. Use the LCD driver to directly drive a large segmented display

www.microchip.com/16bit

Microchip Technology Australia
Tel: (02) 9868 6733 E-mail: aust_nz.inquiry@microchip.com

MICROCHIP

Microcontrollers • Digital Signal Controllers • Analog • Memory • Wireless

The Microchip name and logo, and PIC are registered trademarks of Microchip Technology Incorporated in the USA and other countries. mTouch is a trademark of Microchip Technology Incorporated in the USA and other countries. © 2012 Energizer. Energizer and other marks are trademarks owned by Energizer. All other trademarks mentioned herein are the property of their respective companies. © 2012 Microchip Technology Incorporated. All rights reserved.

NEW 30AMP 12V/ 24 DC PWM with SOFT START FEATURE

The MXA087 PWM MODULE is a new generation microprocessor - based DC Motor Speed Controller for loads up to 30Amps at either 12V or 24VDC

Fully Assembled and Tested

Value!!! $50.22 inc. GST Plus $7.50 Pack & Post

NEW CLOCK /TIMER KIT with 20 ON/OFF EVENT CAPABILITY

The FK949 12V Clock Timer kit displays current time in 24hour mode in hours and minutes or minutes and seconds. Up to 20 ON/OFF events may be preset to drive a 500watt load via its on-board relay

Build in 30 minutes!

Only $33.26 inc. GST

add $7.50 P & P

For more details or to buy on-line see us at:

www.kitstop.com.au

P.O. Box 5422 Clayton Vic.3168

Tel:0432 502 755

KitStop electronics – The fun starts here

Mailbag: continued

VU meters tell the story

In your March Issue, Neil Davis and Brian Wallace both make interesting comments about the loudness of commercials versus program material. I would make the broad statement that almost all audio program material broadcast these days has undergone a degree of compression. Only a few fine music stations claim not to. Compression is carried out either in the initial recording and editing process, the transmission path or both.

I still have (after many years) one of David Tillbrook's control units with LED VU metering. In his design, David built simultaneous peak and average readings. Putting this across a broadcast or telecast audio signal shows that most material has little difference between peak and average readings. This is evidence of serious compression.

Then in order to have the commercial's audio compete in the attention-grabbing stakes, often the VU LEDs hardly move at all, except during pauses!

The following story demonstrates how extreme signal processing can get. When I worked for a National Broadcaster in Canberra (again, years ago, before satellites), we often recorded and broadcast a national program called "Notes On The News". As it left our studios, it was put through a CBS "Audimax" compandor. The signal also went through a limiter at the transmitter.

One day, I had a visit from a technician who lived in Perth. He complained that when programs like ours reached Perth, the VU meters peaked on 0dbm and stayed there! He told me that after a bit of research on his travels over to us in the east, he had found that the signal leaving us was companded again in Sydney prior to passing on to Melbourne where it copped another dose.

In Adelaide, there were, he told me, two passes; one through Master Control as the signal went to air but because the signal to Perth had to be delayed before crossing the Nullabor, that signal was companded again as it left the Adelaide Record Suite. No wonder the VU meters did not move!

In our studio operations, we were required to record or broadcast music at a level somewhat below that reached by the voice of the announcer/presenter attached to that program. This was so both would have a similar apparent loudness and therefore have transitions sounding pleasant to the ear of the listener. I still use that principle in my current life in Community Radio and have been commended for it.

It seems to me that if a program and its commercials have audio that disrupts the audience's attention, then the presentation folk in that TV or radio station have annoyed and therefore lost that listener's attention. Surely, advertisers must be aware of this. If audience attention is diverted by audio levels, then he/she cannot be focusing on the commercial message.

Bruce Bowman,
Ainslie. ACT.

the effect of variations in ambient temperature, the entire circuit could be enclosed in a temperature-controlled oven.

Having made the second submission, I discovered that a team at Linear headed by the late, great Jim Williams, had been thinking along similar lines. In Linear Application Note AN86, A Standards Lab Grade 20-Bit DAC with 0.1ppm/°C Drift (**http://cds.linear.com/docs/Application Note/an86f.pdf**) they employ two 16-bit DACs with 8-bits of overlap to effectively form a 24-bit DAC. This DAC is used in a feedback loop with a 24-bit delta-sigma ADC to form a precise, stable DAC whose output is referenced to a single fixed precision voltage source.

I agree that modern components are inexpensive and precise enough that all this effort to design and build a discrete circuit is unnecessary but the circuit as published does have a couple of interesting ideas that someone might some day find useful.

Andrew Partridge,
Toowoomba East, Qld.

Loud TV commercials

I refer to the Publisher's Letter in the February 2012 edition, entitled "Loud Television Commercials Will Continue To Be Annoying".

I enjoyed the whole article and

found it to be an accurate reflection of what is going on out there, with TV and other volumes all over the place and the ongoing onslaught of media advertising. Adverts continue to mostly be annoying when you just want to get back to the main program you have been watching; adverts waste so much time. But everyone is used to those annoying commercials so they have devised their different approaches to circumvent them, as Leo pointed out in his Publisher's Letter.

I just basically ignore advertisements on TV and will go do something else while around seven or so adverts screen in each commercial break. When it comes to the volume problem I like everyone else am constantly changing the volume setting on the TV, depending on whether I am watching TV (volume varies between stations) or watching a DVD or an old VHS tape. The volume varies again for a DVD and a VHS tape and when I play an audio CD on the DVD player.

You presented a new Stereo Compressor project in the January 2012 edition. I can see how the audio outputs of a DVD player, a VHS tape player and a cassette deck could be fed to the TV via the stereo compressor. But I can't see how you can use the stereo compressor with a TV itself; the sound feeds directly to the speakers inside the TV. Perhaps the sound can be fed out to external speakers via the stereo compressor? If so then how do we switch off the internal TV speakers? Can we use the mute function or does this cut off the TV's audio completely or does it only mute the internal speakers? The TV audio may always be available at the various RCA outputs regardless of whether we use the mute function or not?

I agree with Leo that people are watching less TV these days as they want some quality with their TV viewing experience. The ads and volume problems do not add anything positive to the TV viewing experience so people will inevitably vote with their feet and their remote controls (or the off buttons on the TV or those at the wall socket).

Mark Eastaugh,
Armadale, WA.

Comment: the stereo compressor project is an effective solution only if the TV is being used in a home theatre system, ie, with external amplifier and speakers. Some up-market digital TV sets do have in-built "volume levellers" which go some way to coping with differing audio levels from different TV stations. However, the stereo compressor has little real effect on TV commercials which have high levels of audio processing. In those cases, the only cure is to use the mute button on the remote control.

Comments on Maximite triggering

Thank you for publishing my contribution in the Circuit Notebook pages of the March 2012 issue. However, I have some concerns regarding the Editor's Note at the conclusion of the item.

If, as suggested, pin 1 of the Maximite is connected to pin 2 (Q-bar) of IC1a, it is certainly possible to trigger the interrupt this way but the trigger event should occur on Q-bar going low to high which marks the end of the gating period. So the interrupt should be a low-to-high transition and not a high-to-low as suggested in the note.

In addition, pin 1 of the Maximite performs two different functions. The first is in the initialisation routine where it is defined as an output (line 10) and used to ensure that IC1a is in the correct reset state initially. After this initialisation, pin 1 is then redefined to be the interrupt pin (line 30).

Clearly, if pin 1 of the Maximite is disconnected from pin 4 of IC1a and reconnected to pin 2 instead, it cannot perform this initialisation function and some other circuitry must now be added to pin 4 to ensure the reset state is attained at power on. Any additional circuitry added to pin 4 runs the risk of it interfering with the primary task of the circuit and that is to measure the charging time of a 4.7nF capacitor through a 100kΩ resistor.

Jack Holliday,
Nathan, Qld.

Sound levels in cinemas are excessive

The sound level in cinemas and theatres is now grossly excessive.

Consider the sound system at the Astor in Windsor, Melbourne, an elegant Art Deco cinema built in the

Mailbag: continued

Banning incandescent lamps was a silly idea

Because I was looking for a high-power motor controller, I burrowed my way back to the April 2007 edition of SILICON CHIP and found the article I wanted. I also happened to re-read your Publisher's Letter in the same issue, entitled "Banning incandescent lamps will have a negligible effect on greenhouse gasses".

After five years of this nonsense now, I wonder if the Federal Government could tell us exactly how much "greenhouse gas" has been saved on the planet as a whole but more importantly, tell us how much mercury has been bulldozed into landfill sites when the "dead" fluorescent lamps have been thrown out and not recycled.

I guess it goes to prove that the Liberals (this was Malcolm Turnbull's bright idea) are just as idiotic as Labor in the global warming – sorry, "climate change" – scaremongering. The only up-side to the Carbon Tax that is going to save the world is that it should ensure the total demise of Labor at the next election.

John Brown,
Bibra Lake, WA.

1930s. It now boasts a total of 11 kilowatts of sound, including 3.5 kilowatts fed into eight 18-inch subwoofers. On display in the foyer is the original Western Electric sound system. State of the art for 1929, it comprises a six-foot high 19-inch rack, with an impressive output of 15 watts!

The original theatre seated 1700 people and I'm sure they had no difficulty hearing the sound.

James Goding,
Carlton North, Vic.

Good customer relations from Telstra

SILICON CHIP printed a letter of mine in the March 2012 issue which mentioned my frustration in dealing with Telstra over our poor mobile phone coverage.

I have a lifelong experience in radio and microwave communications and could not understand why a mobile phone tower only 2.2km away did not service our suburb. After two years, I and the TIO gave up. Telstra provided no logical reason as to why we had such poor phone coverage. The team leaders and case managers had no technical knowledge of mobile phone systems, even though they were handling my complaint.

Two years after this I decided to write directly to the CEO of Telstra, David Thodey, in the hope that he may just read my letter. Well he did, or at least one of his direct office staff did and three days after sending the letter I received a phone call from a Telstra engineer who talked my language; radio.

In two sentences I now knew why a 30-metre high phone tower 2.2km away, with large gain antennas pointing at our house and with minimal terrain problems did not get to our house. It was designed not to!

The antennas on the tower pointing at us are phased so as to produce 9° of downwards tilt. This limited the signal from the phone tower to less than 1km. It sure works, as you have to drive to under 1km before suddenly your phone works with full signal strength. Beyond this distance, if you removed a few trees, you could see the tower but still get little or no signal.

The reason for the downwards tilt is that we live in the hills east of Perth's metropolitan area and as the phone tower is up high it interferes with other cells on the coastal plane, so the signal is prevented from spilling over onto the wider area by electronically down tilting the antennas. We are in that direction.

At long last my decades of working in the radio propagation domain, along with having an amateur license, were vindicated. There was an understandable reason as to why we had no mobile phone coverage, along with all the other neighbours in the area. There really was a reality about radio waves after all.

Telstra fixed the problem for us in two weeks! They came out to our house and installed a fairly new repeating system, that now gives us full signal strength on our mobile phones, in and around our house.

I'm not 100% sure how it works but it appears to be an on-frequency repeater. A 15-element Yagi antenna on the roof points at the best phone tower signal (not the one 2.2km away) and this full-scale signal is connected to a box that is WiFi linked to another box further away in the house and this

cleverscope

Mixed Signal Oscilloscope + Signal Generator

Some key features

+ Windows and Linux
+ 10ns resolution on 40 msec display
+ Disk save at 1.5 MSPS, to 500 GSamples.
+ Spectrum analysis – see 50Hz in 50 MHz.
+ Driver software for Visual C#, C++, Basic, Labview, Delphi and C Builder with examples.
+ Protocol decoding – SPI, I2C and UART
+ Isolated Ethernet option

Mixed signal with protocol decoding

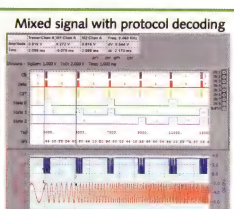

www.cleverscope.com

You have a choice.

Pick any architecture you want. Choose the programming language that suits you best. Whatever you go for, the same comfortable and **intuitive IDE** will follow. Powerful **SSA optimizations**, resourceful **Help** file, dozens of **Tools** and lots of **Examples** are here to get you started quickly. And if you ever change your mind, just switch between different architectures easily. We have been carefully planning backward compatibility for over **500 of our library functions**, so you will be able to literally copy-paste your existing codes and build them with just a few adjustments.

MikroElektronika
DEVELOPMENT TOOLS | COMPILERS | BOOKS

GET IT NOW
www.mikroe.com

OCEAN CONTROLS
Helping to put you in Control
Control Equipment

Serial Server
The SE5001 is a gateway for Ethernet (TCP/IP) and RS232/RS485/RS422 serial communications. It allows almost any serial device to be connected to a new or existing Ethernet network .
ATO-101 $129+GST

Solid State Relay
A 2amp 240VAC solid state relay with a 6-24VDC input. Features zero crossing and screw terminals.
KTD-273 $19.00+GST

RHT Controller.
Easy to configure it features 3 relays for temperature, humidity and alarm. Comes with a 3m long probe and RS485 comms
CET-112 $209.00+GST

Anemometer Datalogger We have upgraded our anemometer monitoring and alarm card to now include a datalogger to record wind speed and direction
KTA-250-AL $349+GST

VLN3000 Breakout Board
Features an ambient light sensor and an IR proximity sensor with a 20cm range. A I2C interface allows easy interfacing with a microcontroller
SFS-300 $9.95+GST

Arduino Mega 2560R3 This Arduino is fitted with an Atmega 2560 controller and includes 256K Flash, 54 Digital I/O, 16 Analog inputs USB interface and heaps of other features
SFA-104 $59.00+GST

Industrial grade Unmanaged 8 port Ethernet Switch. A 10/100MB switch with a 5 year warranty this switch can operate in temperatures up to 70degC
ATO-005 $159.00+GST

Contact Ocean Controls
Ph: 03 9782 5882
www.oceancontrols.com.au

Mailbag: continued

Solar power absurdities

"I want to receive the generous feed-in tariff just when my solar generation is at a maximum, so please wind down the grid voltage so that I can do so." Why should I get a better price for my power than the power station operators? There must be a more equitable way of encouraging local (and usually more expensive) power generation, if house holders must go to this trouble.

In current practice, you can't just switch off large or even multiple power generators to suit the load, let alone consumers who become generators. Even the planned coal/gas replacement for Victoria's big Hazelwood generators may not react quickly enough when the clouds part over the suburbs of Melbourne.

Electric cars with big enough batteries have been contemplated as generators and storage devices connected to smart grids but why do it? Why waste all those expensive and short lived batteries! Yet it might be feasible to encourage each household to be energy self-sufficient given big enough batteries or other power storage systems, and removing the need for air-conditioners by local storage and usage of heat.

It seems that the combined salt/solar 100MW base-load system at Mildura might get further funding and yet it is not very sensible to consider significant up-scaling requiring "large lakes of fire" as has been mooted in Europe. Reversible hydro has been mentioned lately as having storage recovery efficiencies of the order of 70%. I suppose salt water could even be used as the working fluid, to avoid running out of potable water. But why do it?

Maybe in 30 years time, it will be "proven" that the oceans and water vapour (latent heat of vaporisation in the atmosphere), not CO_2, are what really stabilises the climate – that leaves control of pollution as a very reasonable thing to do. Yet there is probably no hurry (I can already hear the howls of protest!)

Meanwhile, the number of sunspots with their intense solar flares are starting to once again have a measurable effect on our climate, as also might the seeding of clouds by cosmic rays when the sunspots were recently reduced in number.

Why do we try to make things so complicated? Why are we so frightened? Modern technology offers many new ways of doing things and to do so efficiently but we do need to keep things in perspective, hopefully simple and easy to understand and control.

Brian Tideman,
Mulgrave, Vic.

second box repeats the signal from the Yagi.

The two boxes cannot be placed close together. If you do so, a red light comes on telling you to move the boxes further apart. What an amazing piece of technology! Any number of people can use their mobile phones in the house, just like you are living next door to a phone tower.

And the best news of all is Telstra did this at no cost to us. Finally I can give Telstra, and in particular their CEO, a "well done", for letting me talk to someone who had real technical knowledge and as a result we now have mobile phone coverage. Well done Telstra.

William McGhie, VK6UU,
Gooseberry Hill, WA.

Autonomous long-distance trucks might be workable

Talk on the internet to any of the advocates of an ultra-fast fibre-to-every-home National Broadband Network and it is incomprehensible to them that anyone could not want it. Anyone who doesn't must, they think, be misinformed or stupid. And you could see exactly that attitude when the engineer in charge of Google's autonomous vehicle project was interviewed. Wouldn't everyone just want to be able to get in their car in the morning, press a button and have it take them to work while they sit in the back and read the paper? Yes, of course. That was his attitude.

That is undoubtedly true for some people. But for a lot of people, driving

keeps them physically and mentally occupied for the period that it takes to get them to where they have to be and they enjoy the challenge of it.

Autonomous vehicles are the next big thing in cars. The last big thing was electric cars. Every politician talked about how car manufacturers should be building them. But you can count annual sales of electric cars on your fingers.

General Motors' Volt plant in the US has laid off its workers for a couple of months because few people are buying them. Another company got huge media attention by talking about how it would be building battery swap stations so electric cars could go city-to-city despite their short range and long recharge time. There hasn't been a single vehicle sold in this country that could use them.

Advancing technology makes a lot of things possible. But they have to make sense to buyers, to provide them with a benefit that's worth the price. Holden's version of the Volt will be based on the Cruze. It will be the same size car with similar equipment and carrying capacity. But it will cost three times the price. The autonomous version of cars will similarly carry a hugely higher price tag. I have no doubt that the car my children will be driving will, as well as being electric, will also be autonomous. But it won't be either of those because most people want it. It will be electric because oil will keep getting more expensive.

It seems to me that the developers of autonomous vehicles, like Google, are targeting totally the wrong market. The news is full of stories about long-distance truck drivers who are speeding to make the destination before their allowed hours behind the wheel run out, or fatigued and taking drugs to prevent that fatigue because they have to work long hours.

That's where the developers of autonomous systems could get their product onto the roads today. Big trucks are expensive. A whole lot of bulky and expensive hardware wouldn't be noticed and long-distance haulage companies could give us what we want. For our eBay purchases to arrive faster and for our supermarkets to be able to offer year-round fresh food (no matter where in the country it has to be grown), they need to be able to keep their vehicles going for as long as takes to get anywhere without any occupational health or legal compliance issues. Making them autonomous, even if that still required having a human supervisor on board to take over in case of the unforeseen and unprogrammed, would make good commercial sense.

It is not by accident but because it made sense that the first autonomous vehicles in this country were long-range aerial drones used for maritime surveillance and the next will be long-distance ore trains.

Gordon Drennan,
Burton, SA.

Comment: 3915 Chevy Volt electric cars were sold in the USA for the first quarter of 2012. SC

Wasteful wind power

Let's try to understand wind power. Every wind farm needs backup generators to supply power when the wind fails. If there is no wind, zero electricity is produced by the turbines and all power comes from base-load power stations or the backup gas-fired generators.

If wind speed exceeds the design capacity, the turbines are shut down to prevent damage and all power comes from the base-load or backup generators. In freezing still air, the wind turbines take electricity from the backup generators to prevent damage from cold. And they draw power to get reconnected.

When the wind blows strongly all over the wind farm, the grid may not be able to cope with the surge in supply so the operator may be paid to close down some turbines.

Now we find that wind power probably increases the production of carbon dioxide; not that this matters. So why not scrap the wind turbines and produce a steady supply of low cost power from the base-load generators?

Viv Forbes,
Rosewood, Qld.

Australia's Lowest Priced DSOs

Shop On-Line at emona.com.au

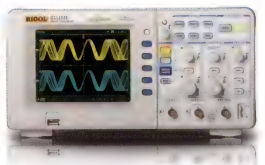

Now you've got no excuse ... update your old analogue scopes!

Whether you're a hobbyist, TAFE/University, workshop or service technician, the Rigol DS-1000E guarantee Australia's best price.

RIGOL DS-1052E 50MHz
- 50MHz Bandwidth, 2 Ch
- 1GS/s Real Time Sampling
- 512k Memory Per Channel
- USB Device & Host Support

ONLY $362 inc GST

RIGOL DS-1102E 100MHz
- 100MHz Bandwidth, 2 Ch
- 1GS/s Real Time Sampling
- 512k Memory Per Channel
- USB Device & Host Support

ONLY $439 inc GST

Sydney Tel 02 9519 3933 Fax 02 9550 1378
Melbourne Tel 03 9889 0427 Fax 03 9889 0715
Brisbane Tel 07 3275 2183 Fax 07 3275 2196
Adelaide Tel 08 8363 5733 Fax 08 8363 5799
Perth Tel 08 9361 4200 Fax 08 9361 4300
email testinst@emona.com.au
web www.emona.com.au

EMONA

The Australian

The Australian Synchrotron is one of the nation's largest and most significant scientific facilities. It is a powerful machine of great utility that enables investigators to determine the structure and composition of all materials, including living specimens, with extremely high detail.

By Dr David Maddison

The Australian Synchrotron, located adjacent to the Monash University campus in Clayton, Victoria, was completed in 2007 at a cost of $221 million.

Funding came from the Victorian Government with a contribution of $157 million, with additional funding of $50 million from other state government, university and research organisations and a $14 million dollar contribution from the Commonwealth government. About 65% of the initial funding was spent with local suppliers and contractors. As well, substantial design input was made by Australian scientists and engineers. The facility has an annual operating budget of $25 to $30 million.

When not undergoing scheduled maintenance, the synchrotron runs 24 hours per day, year round, producing a

Bird's-eye view of the Australian Synchrotron (bottom right). Some idea of the size of this facility can be gleaned by comparing it with the oval in the grounds of the Monash University at left!

Synchrotron

What is a synchrotron?

As described on the Australian Synchrotron website, in simple terms, a synchrotron is a very large, circular, megavoltage machine about the size of a cricket ground. From outside, the Australian Synchrotron, for example, looks very much like a roofed football stadium. But on the inside, it's very different. Instead of grass and seating, there is a vast, circular network of interconnecting tunnels and high tech apparatus.

Synchrotrons are a type of particle accelerator and when used to accelerate electrons, can produce intense beams of light, a million times brighter than the sun. The light is produced when high-energy electrons are forced to travel in a circular orbit inside the synchrotron tunnels by 'synchronised' application of strong magnetic fields with very powerful electromagnets.

The electron beams travel at just under the speed of light – about 299,792 kilometres per second. The intense light they produce is filtered and adjusted to travel into experimental workstations, where the light reveals the innermost, sub-microscopic structure of materials under investigation, from human tissue to plants to metals and more.

With this new knowledge that synchrotron science provides about the molecular structure of materials, researchers can invent ways to tackle diseases, make plants more productive and metals more resilient – among many other beneficial applications of synchrotron science.

More technical information about how the Australian Synchrotron and other similar facilities work is available from the 'ABOUT US/Our facilities' section of the www.synchrotron.org.au website.

wealth of scientific results and important industrial research.

It is one of about 50 similar devices around the world, although not all are as new or as advanced. Typically 3,500 scientists visit the facility each year and work on more than 600 experiments.

In order to probe a material's structure the Synchrotron produces what is essentially very high quality light, tunable over a wide variety of wavelengths from the microwave part of the spectrum through to "hard" X-rays (see diagram).

Note that non-visible electromagnetic radiation such as X-rays is also considered a form of light.

The beam is very intense with a brightness of around one million times greater than that of the Sun and the X-rays produced can be millions of times more intense than those produced by conventional X-ray tubes.

The Synchrotron is a state-of-the-art, third generation device. It was conceived at the outset to produce bright X-rays and other wavelengths of light compared with the first generation of such devices in which synchrotron radiation was utilised essentially as a by-product of particle accelerators..

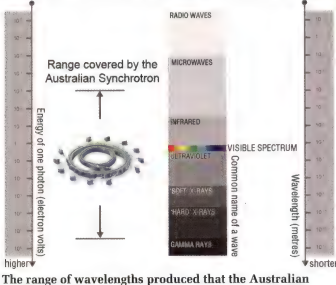

The range of wavelengths produced that the Australian Synchrotron. Image: Australian Synchrotron.

Other characteristics of the generated light are that it is highly collimated meaning that the light rays in the beam all travel parallel to each other as in a laser beam.

The light beam is also polarised and different polarisation modes can be produced as required for different experiments. In addition, the light is also pulsed.

Information about the structure and composition of matter is revealed by the way the light beam interacts with the object under investigation.

The beam may be absorbed, transmitted, refracted or diffracted by the object and by carefully measuring the beam

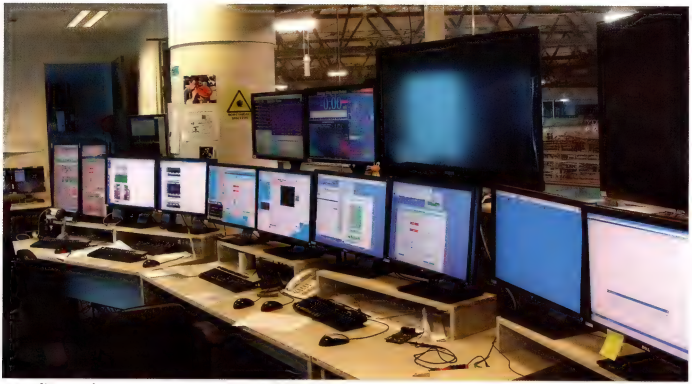

Australian Synchrotron control room. Image: the author.

properties after it has interacted with the test specimen, it is possible to determine its structure and composition.

The Synchrotron is used by Australian and New Zealand scientists and industrial researchers and by many other scientists from around the world. These scientists and associated staff are extremely dedicated and enthusiastic about their work in this facility. To accommodate the many visiting scientists there is an accommodation block currently under construction.

Schematic view of the Australian Synchrotron. Image: Australian Synchrotron.

Applications

Most experiments fall within three main categories. These are (a) X-ray diffraction and scattering to determine the crystal structure and other structural properties of samples; (b) spectroscopic analysis down to nanometre resolution (one millionth of a millimetre) to determine the chemical composition of samples and (c) high resolution imaging at any wavelength of light that can be produced at the Synchrotron of biological and non-biological materials, animals and, in the future, humans.

Some research highlights from the Synchrotron are as follows:

- *Determination of whether a proposed coating on electrode wires used on the Monash bionic eye would damage the wires. The rapidity with which the results were obtained saved a large amount of development time and money.*
- *Improvement of processes to extract pharmaceutical substances from poppies by determining their chemical structure from minute samples.*
- *Development of microbeam therapy to treat cancer.*
- *Imaging of lung function in newborn animals to better understand breathing processes in premature babies.*
- *Discovery of new information about an immune system protein leading to a better understanding of treating diseases.*
- *Research on the life-cycle of the malaria parasite in blood cells which will lead to the development of better drugs to control the disease.*
- *Research on immune system T-cells to develop better drugs to boost immune system function.*
- *Use of imaging techniques to develop new procedures to accurately place cochlear implants and improve their function.*
- *Development of techniques to accurately identify healthy human egg cells for use in IVF procedures.*

"MASSIVE" Computing Facilities

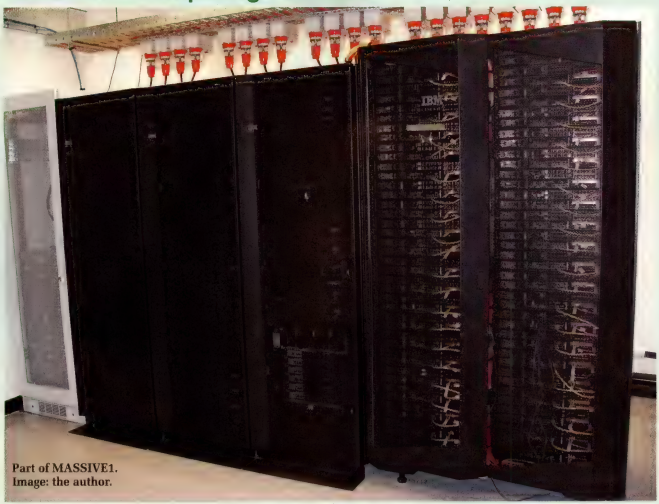

Part of MASSIVE1.
Image: the author.

Each experiment at the Synchrotron produces large quantities of data which need to be stored and processed. The Synchrotron facility has a supercomputer cluster to perform this task.

MASSIVE (Multi-modal Australian ScienceS Imaging and Visualisation Environment) provides the hardware, software and personnel needed to service this task, among others.

This facility, which actually consists of two machines connected by a high-bandwidth link, is also accessible by scientists working in areas outside the Synchrotron such as in neuroimaging, geosciences and microscopy or any other area that requires advanced image processing and visualisation resources.

The great computer power allows three-dimensional images to be generated and manipulated in real time, enabling researchers to adjust their experiment and/or the beam parameters without having to wait for post-processing of image data.

MASSIVE1 is located at the Synchrotron facility and MASSIVE2 is located next door at Monash University, Clayton campus. The computer utilises both CPUs (Central Processing Units) and GPUs (Graphics Processing Units) for its computing tasks. The CPUs are used for regular computing while the GPUs are used for graphic processing and can also be used for matrix and vector operations for non-graphic tasks.

MASSIVE1 has a capacity five teraflops for traditional CPU computing and 50 teraflops when using its GPU co-processors and MASSIVE2 has a capacity of 10 and 100 teraflops respectively. (One teraflop is 10^{12} floating point operations per second.) The specifications are as follows:

MASSIVE1 at the Australian Synchrotron

- 42 nodes with 12 cores per node running at 2.66GHz (504 CPU-cores total)
- 48GB RAM per node (2,016GB RAM total)
- 2 nVidia M2070 GPUs with 6GB GDDR5 per node (84 GPUs total)
- 58TB of fast access parallel file system (IBM GPFS)
- 4x QDR Infiniband Interconnect

MASSIVE2 at Monash University

- 42 nodes with 12 cores per node running at 2.66GHz (504 CPU-cores total) in two configurations, 32 nodes identical configuration to MASSIVE1
- 48GB RAM per node (1,536GB RAM total)
- 2 x nVidia M2070 GPUs with 6GB GDDR5 per node (64GPUs total)
- 10 nodes (visualisation/high memory configuration)
- 192GB RAM per node (1,920GB RAM total)
- 2 x nVidia M2070Q GPUs with 6GB GDDR5 per node (20 GPUs total)
- 250TB of fast access parallel file system
- 4x QDR Infiniband Interconnect

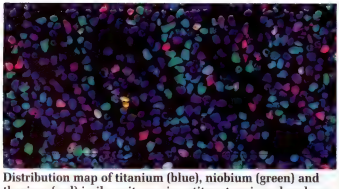

Distribution map of titanium (blue), niobium (green) and thorium (red) in ilmenite, an iron titanate mineral and an important source of titanium dioxide for pigment. It was produced using the innovative Maia detector. The field of view is 10 x 6 mm. Image: La Trobe University, CSIRO, Australian Synchrotron.

- *Development of techniques to track stem cells as they repair the body. This information can be used to develop methods of stem cell therapy.*
- *Search for gold in ore samples in which the gold cannot be detected by normal techniques. This may lead to the discovery of new gold deposits.*
- *Analysis of the structure of sheep leather, which has led to methods to strengthen it so it can be used for shoes, something which is not otherwise possible.*
- *Understanding how the runoff from acidic soils affects Australia's east coast fisheries and the development of methods to control soil acidity.*
- *Understanding the reason for the buildup of scale in pipes used in the bauxite industry and the development of methods to alter processing conditions in order to minimise scale formation.*
- *Exploration of materials for use in the electronics industry such as synthetic diamond films.*
- *Studying the distribution of nutrients in foods after processing in order to assist in the development of plant varieties which better retain their nutrients.*
- *Studying old paintings to look for underlying images, determine paint composition or to establish authenticity. Analysing the composition of glazes on ancient Egyptian artifacts.*
- *Examining the internal structure of ancient fossils which are too fragile to completely remove from their rocky encasement and also imaging soft tissue impressions therein.*
- *Analysing the structure of "green" cement and enabling VicRoads to update their standards to allow for its use.*
- *Studying molecular structures which are suitable for hydrogen storage for its use as an alternative fuel.*
- *Researching the interaction of carbon dioxide with various materials that may be used for sequestration of the gas.*
- *Development of a forensic method to identify soil from crime scenes using extremely small samples.*
- *Studies of the chemistry of fingerprints to enable improved detection.*
- *Discovering why Phar Lap died by looking for toxins in hair follicles from his preserved hide. This indicated ingestion of arsenic in the last 30 hours of life.*
- *Studying the distribution of elements in mineral samples (see picture above).*

Image of animal lungs clearly showing detailed structure. Such detail cannot be achieved with conventional imaging techniques. Image: Australian Synchrotron

Apart from other areas of world-leading expertise indicated above, scientists at the Synchrotron are leaders in determining the structure of proteins, an essential component of all life forms.

The structural determination of many proteins is extremely difficult or impossible by conventional techniques but is assisted at the Synchrotron using the technique of small angle X-ray scattering. Normally, high quality crystals are required for this work but unfortunately, some proteins do not crystallise well.

In these cases, the Synchrotron can be used to determine the shape of the protein's outer "envelope". With this partial information it is possible to infer the rest of the structure with the aid of advanced computing methods.

A particularly difficult medical imaging problem is to visualise lung tissue and the motion of the lungs during breathing. Due to the high resolution of the beam and the tunability of the X-rays, successful imaging has been achieved by Australian research groups and the findings have already found application such as in studies of cystic fibrosis and asthma.

"Tricks" of light are used to image the soft tissue and air spaces of the lungs whereby X-rays are refracted differently from the tissue and the air. Tuned with the right parameters a "phase contrast" image, which can be viewed in real time if desired, can be produced to show the working lungs.

How the light beam is produced

In essence the function of a synchrotron is to generate a beam of charged particles travelling close to the speed of light. These can then subject them to an acceleration which causes them to emit light radiation. This beam of particles is maintained in a storage ring.

Electrons are typically used as the charged particles for light generation and different magnet configurations are

Medical applications

A recently built facility at the Synchrotron site is the flagship Imaging and Medical Beamline. This was built with a grant of $13.2 million from the National Health and Medical Research Council and grant of $1.5 million from the Victorian Government.

It will be used for medical (and other) imaging research as well as treatment research, for example on high precision irradiation of tumours.

An interesting area of research is to irradiate tumours in a "checkerboard" pattern which is possible due to the fine control possible with the X-ray beam. This has been shown to destroy tumours just as effectively as normal radiation treatment but with much less damage to healthy tissue.

Other clinical research will include observing how tumours respond to treatment and the possibility of watching specially marked individual cells migrate through the body in real time.

The new Imaging and Medical satellite building. The synchrotron beam is conveyed to this building via a 150m long tunnel. Image: the author.

For patient comfort, the facility will provide patients with a clinic-like rather than a "laboratory" experience. Note that the present intention is for selected patients to visit for clinical research and trials only – this will not be a general facility for patient treatment.

The facility also contains sections to house and conduct research on animals. Of interest is a miniature combined CT and PET scanner for small animals such as mice (see picture).

The central feature of this facility is the beamline that arrives via a 150m long tunnel leading from the Synchrotron to the new building. The long tunnel is needed to allow the X-ray beam from the Synchrotron to expand in size from the original dimensions of 1mm wide by 50 microns high to produce the largest X-ray beam of any synchrotron in the world, having a cross section of 50cm by 4cm.

This beam will enable images to be produced with a resolution of one micron over large areas of a human or animal body. Typical human and animal cells are 10-100 microns in size so images of individual cells should theoretically be possible.

Images that are about one hundred times more detailed than a hospital CT scanner will be able to be produced and monitored in real time.

Imaging and Medical beam tunnel, 150m long (under construction). Note the black support structures which will hold stainless steel tubing under vacuum that will contain the X-ray beam. One small section of tube is installed in this picture. Imaging will occur in a room at the end of the tunnel. Image: the author.

Miniature CT/PET scanner for small laboratory animals such as mice. For scale, compare with the size of the small computer screen on the left. Image: the author.

Prototype magnet assembly on display in the Synchrotron building showing the bending or dipole magnet (yellow) which causes the generation of the synchrotron radiation when electrons pass through its centre (in the direction from one side of the picture to the other) at close to the speed of light. The red and green magnets at each end are quadrupole and sextupole magnets respectively and these are used to focus and steer the beam. Image: the author.

used to make the electron beam either bend, "undulate" or "wiggle", causing the electrons to accelerate and emit light. Note that in physics terminology "acceleration" can mean a change in either speed or direction. In this case it is the change in direction as the electron travels through the bending magnet that constitutes acceleration.

The Synchrotron consists of the following main components: electron gun, linear accelerator, booster ring, storage ring and beam-lines where the radiation is emitted into the experimental "end stations" as shown in the diagram of the Australian Synchrotron.

Generating the electrons and then boosting their speed is a multi-stage process.

Electrons are first generated with an electron gun similar to one in a cathode ray tube, only larger. The electron gun produces electrons with an energy of 90keV.

After leaving the electron gun, electrons are injected into the linear accelerator (LINAC) where the 90keV beam is boosted to an energy of 100MeV. Electrons are energised using a series of radio frequency (RF) resonant cavities which operate on a similar principle to the magnetron in microwave ovens.

When a radio wave of the appropriate frequency is generated and enters a resonant cavity, a standing wave is created, the intensity of which increases as more RF energy is injected. Electrons in the beam absorb that energy and their speed is increased. The electrons are travelling at 99.9985% of the speed of light as they leave the LINAC.

After leaving the LINAC, the electron beam enters the booster ring where the beam is further energised from 100MeV to 3GeV with the use of a 5-cell RF resonant cavity. The booster ring also contains 60 combined focusing and steering magnets.

The electrons are resident in the booster ring for half a second during which time they complete one million circuits of the 130m-long ring. A new cycle for the next batch of electrons can be initiated every second.

In the final stage, electrons from the booster ring enter the storage ring. This has a circumference of 216m and actually consists of 14 main sections each with a 4.4m straight

Right: prototype sextupole magnet. Image: the author.

Below: end-view of prototype quadrupole magnet. Image: the author.

section and an 11m arc-shaped section.

Each arc section contains two bending magnets (also known as dipole magnets) as well as six quadrupole (four pole) and seven sextupole (six pole) electromagnets.

Each bending magnet generates synchrotron radiation as the electrons pass through it at close to light speed. As shown in the following diagram, the radiation (green) is

Radiation pattern (green) as electron traverses the bending magnet (path shown in red). Image: Australian Synchrotron.

emitted at a tangent to the direction of the electron path through the magnet. It is this radiation that is used in experiments.

At each experimental station at the active beam-lines there are beam-line optics that contain filters, monochromators, mirrors, attenuators and other optical devices that help condition the beam to the required characteristics for each experiment. Following these optics is the rest of the experimental equipment such as a spectrometer or X-ray diffraction apparatus.

All of the "end station" equipment sits in a radiation-shielded "hutch" to protect staff from X-ray radiation.

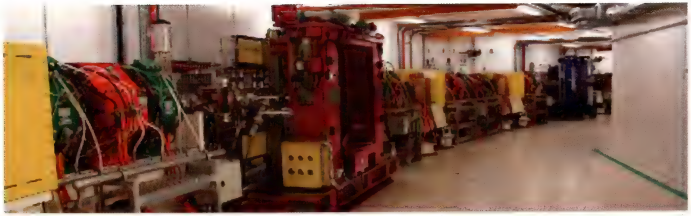

Part of the storage ring of the Australian Synchrotron. Image: Australian Synchrotron.

The quadrupole and sextupole magnets are used to keep the electron beam focused and to correct for any aberrations in the beam. In all, there are 84 quadrupole magnets and 98 sextupole magnets in the storage ring. The sextupole magnets also have extra windings to provide vertical or horizontal corrections to the beam path.

Typically the electron beam is 50 microns wide with a deviation from the desired path of no more than 5 microns (one micron is one thousandth of a millimetre).

The magnets are water cooled and the temperature in the main building and the beam tunnel is highly controlled to minimise errors due to thermal effects in equipment and the structure.

Two of the straight ring sections contain a total of four RF cavity resonators in order to replace beam energy that is lost due to synchrotron radiation.

The remaining twelve straight sections are able to accommodate "insertion devices". These devices are used to further increase the intensity of the light and impart it with certain characteristics. There are two types of insertion devices. One is the "multipole wiggler" and the other is the "undulator".

In the wiggler, light cones are emitted at each bend in the electron trajectory and these cones reinforce each other to

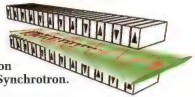

Multipole wiggler: the green shading represents the emitted radiation and the red line represents the electron path. Image: Australian Synchrotron.

create an extremely bright, broad spectrum beam.

In the undulator, weaker magnets are used, resulting in a more gentle bending of the electron's path. In this configuration some cones of light interfere with each other cancelling out their energy, while others reinforce each other. By adjusting the spacing between the magnet poles it is possible to enhance some frequencies of light to thousands of times the intensity of other frequencies, allowing for an extremely intense beam at one particular wavelength of choice.

Undulator: the radiation pattern is shown in green and the electron path in red. Image: Australian Synchrotron.

The electron beam needs to be maintained in an enclosure that is kept under an extremely high vacuum, in this case 10^{-13} bar (10nPa) where 1 bar is equivalent to about one atmosphere of pressure. The reason for this ultra high vacuum is so that the electrons will not lose energy or be scattered by residual gas particles.

As the electrons in the beam are travelling at very close to light speed Einstein's Theory of Relatively applies. Due to relativistic effects, including time and length contraction, from the electrons' point of view, the time and distance through which they travel appears much shorter than a stationary observer would experience.

This means that the frequency of light emitted as the electrons are accelerated through the bending, wiggler or undulating magnets is many orders of magnitude greater than would otherwise be the case if Relativity did not apply.

Beam-lines and future development

Currently there are nine beam-lines in use. These are used for powder diffraction, X-ray absorption spectroscopy, small and wide angle X-ray scattering, soft X-ray spectroscopy, infrared spectroscopy, macromolecular spectroscopy and micro crystallography, X-ray fluorescence microscopy and medical imaging.

All these beam-lines are in constant heavy use and even so, there is not enough beam-line time available to service the demand for them. Fortunately, the Synchrotron was constructed with future expansion in mind and a total of 29 additional beam-line positions are available.

The Synchrotron is subject to continual improvement and there is a dedicated accelerator physics group who are constantly working to better the device by improving control systems, beam parameters and researching theoretical aspects of synchrotron devices.

Conclusion

The Synchrotron provides Australian researchers with a powerful, world-leading set of tools for analysing and imaging living or non-living matter in ways that are unachievable by conventional techniques. SC

OPEN DAYS

The Australian Synchrotron has periodic Open Days. The last one, in November 2011, attracted over 3,000 people. The next Open Day is expected to be later this year. Keep an eye on the Synchrotron website (www.synchrotron.org.au) for details.

Getting the most from ADSL

It's a fair bet that most readers of SILICON CHIP enjoy their daily fix of internet access by courtesy of ADSL. While some readers are luxuriating with optical fibre – and an unhappy minority are still using dial-up – most of us owe our ongoing communication to the distinctly freakish technology of ADSL. But what exactly is ADSL and what came before it? How does it work and why is it often called a "freak" technology? Are your internet speeds painfully slow? Can anything be done to speed them up? Do you curse your ISP? Read on!

By ALAN FORD

Many of us remember the early days of text-only bulletin boards (which could be regarded as the fore-runners to today's internet), to which we connected via an acoustic modem.

Bulletin boards were set up in the early 1980s by special interest groups, some businesses and even altruistic individuals. Most specialised in a particular subject or brand and we connected to them by dialling a number specific to that bulletin board. We then carefully inserted the telephone handset into a contraption of cups and flexible joints.

We laid it on its side to prevent the carbon granules in the microphone from coalescing, moved the cat out of the room to prevent the heavy tread of its paws from interrupting data flow and settled down to enjoy the lightning fast data transfer speed of approximately 300 bits per second (bps).

A Radio Shack (Tandy in Australia) acoustic modem from the 1980s. These did not work well with the carbon microphone used in Australian telephones at the time.

Without delving into the esoteric realms of parity bits, overhead or consideration of baud versus bits (don't ask!), you can take that as about 35 characters/bytes per second (8 bits = 1 byte). In practice, various factors contributed to delays (as they do today) and we would usually see text characters emerging on our computer screens one by one or in groups of a few at a time.

How did that old acoustic modem work? Computer binary data streams (well, trickles) would be converted in the modem (or "modulated") and transmitted over the telephone line as frequency shifted audio tones. At the ISP's end another modem would convert the sounds to data (or "demodulated"), or vice versa. In fact, that's where the word "modem" comes from: it's a MODulator/DEModulator.

That was fine for plain text but then along came graphics, with Microsoft Windows a pioneer (but certainly not the only one), as well as the World Wide Web. Now we needed to access the Web with its rich images and sounds as well.

The direct modem

Enter the direct-wired modem, connecting the computer electrically to the PSTN (Public Switched Telephone Net-

Aaahhh – the way we were! This photo, taken in 1981, shows a youthful Dick Smith talking bits and bytes with an equally youthful and then-hirsute Leo Simpson. But the main point about this picture is not so much the all-new System 80 computer and its external floppy disk drive, it's that whizz-bang acoustic modem in which the telephone handset resides. The problem with this (which obviously Dick and Leo didn't understand) was that the modem needed to be turned on its side to work properly, otherwise the carbon granules in the microphone would tend to coalesce – and cause data loss.

work), with much anguish on the part of the telcos (well, Telecom Australia!).

They (Telecom) even took to placing adverts in the media warning of the dangers of using unapproved (ie, not supplied by them!), mainly imported modems and the heavy fines for doing so. It wasn't too long before they realised the horse had well and truly bolted so instead started issuing approvals for imported equipment.

Wired modems used more complicated methods of coding and offered much faster communication than the simple two-tone system of the acoustic device. Speeds increased as modulation methods became more clever, until in theory 56kb/s could be reached.

In case you haven't done the sum, that's about 187 times faster than the acoustic modem! Of course, we still were using the PSTN speech path and bandwidth, so for a time it was thought that 56kb/s was the limit. But we could now get our images — even some (jerky) moving ones!

But as well as new Web applications needing even more speed, there was another big disadvantage to the technology — the engaged line syndrome. While we were using the 'net', the Mother-in-law received the engaged signal and could not impart any telephonic wisdom to the family. Neither could the kids call their friends.

Today both would use email or even the dreaded text messaging but we are getting ahead of ourselves. Or if by chance we had the call-waiting facility activated, the internet experience would be rudely but soundlessly interrupted; neither the Mother-in-law nor our Net aspirations would be fulfilled. A fortunate few might have had a separate line installed for Net use but it was not a general rule for households.

POTS and carriers

Then along came ADSL, really a "freak" technology and

After acoustic modems came direct-connect modems such as this D-Link DFM-526E 56K. At the time, everyone thought they were unbelievably fast compared to acoustic models. But ADSL has consigned them to the rubbish-heap of history!

in some ways it's surprising it works at all. But it does work if all or most of a large number of aspects are at or near optimum, as I shall explain.

Hopefully my words will reduce the total of frustrated users and prevent many of those newsgroup or forum posts that sometimes use violent language to blame the ISP for shortcomings that are entirely outside its control!

To appreciate how ADSL works it is helpful to go right back to the basic telephone network — the Plain Old Telephone System (POTS) in the mid part of last century.

At first, most lines were strung overhead, including long distance lines, before the much later advent of coaxial and tower-to-tower microwave links. The stringing of a dozen or so wires between say Sydney and Melbourne was expensive and there were obvious limitations of space as the bare wires could not be allowed to touch and short in any foreseeable winds.

To have just a dozen connections between Sydney and Melbourne seems ludicrous now and in fact it was ludicrous then. So it was necessary to somehow concentrate several speech channels down one pair of lines in order that the best use be made of that expensive (and expensively erected) copper — even galvanised iron in some places!

The solution was carrier telephony. A number of telephone channels were modulated onto several different radio frequency (RF) carriers, sent down the overhead wires and separated and demodulated at the other end. Normal speech occupies a relatively narrow bandwidth; typically in those days the speech path was designed for a bandwidth of 200Hz-3kHz.

But the lines were capable of carrying frequencies of several hundred kilohertz — radio frequencies but still carried by line.

A typical carrier system in use in the 1950s was capable of concentrating 17 RF channels down one pair of wires, spaced by 4kHz, with the highest being 68kHz. Later systems used even higher frequencies.

ADSL and more carriers

Years later, internet engineers reckoned (correctly) that they should be able to do the same sort of thing with internet signals. The ADSL method consists of modulating a large group of separate RF channels, often called bins or buckets, and sharing the data to be transmitted digitally amongst them.

That's the Digital Subscriber Link (DSL) but what about the A for Asymmetric?

Think about how we typically use the internet. We type a few characters of a website address and in return we get pages of visual information and plenty of text too. So most of the data traffic is downloaded and therefore most of the bins are allocated to it.

An ADSL2+ capable line carries the normal speech and telephony (POTS) signals in the first 4kHz of bandwidth, followed by a guard (unused) band from 4 to 25kHz, and then a large block of separate frequencies spaced 4.3125kHz apart (up to 512 of them) above that for the internet data. These separate channels are the bins and about 5% of them are used for upload with the rest for download.

The number of bins and the allocation between upstream and downstream varies according to which version ('Annex') of the standard is in use. (And before you pundits

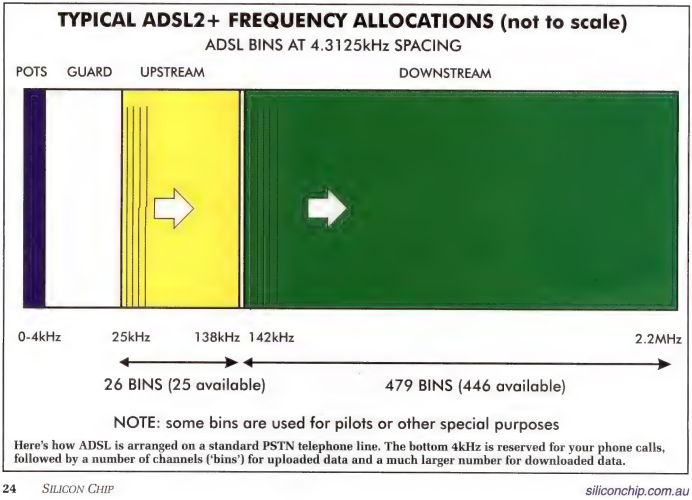

Here's how ADSL is arranged on a standard PSTN telephone line. The bottom 4kHz is reserved for your phone calls, followed by a number of channels ('bins') for uploaded data and a much larger number for downloaded data.

reach for your keyboards, I am simplifying the position for the benefit of newbies).

Separating the information

How is all the information kept separate? First of all let's deal with telephony, because this touches on a great advantage of ADSL — the end of the 'engaged line' syndrome! When ADSL is in use, each telephone should be provided with a low pass filter that allows the DC signalling (such as on-hook condition), AC ring current and audio frequencies (such as speech and DTMF dialling) to pass normally.

The filter passes the lowest part of the total passband (up to 4kHz), to the telephone and keeps it separate from the RF of the internet connection.

The internet is always connected but the telephone, duly filtered, operates normally. Whether or not we are using the net, the phone will still ring if someone is calling and neither telephone party will hear the internet signals.

Now to the Net connection. All the bins, whether allocated to upload or download, are kept separate by the special ADSL modem, a complex piece of technology now relatively cheap. At the telephone exchange end the allocation of the bins is controlled by the Digital Subscriber Line Access Multiplexer (DSLAM). The Modem-DSLAM combination does more than keep all those bins separate. It is also a smart self-training combination, passing information on a per bin basis according to how free of interference each bin is.

Later we will see why this is one possible reason for a slow internet connection. Meanwhile you can see that the provision of a large number of separate but simultaneous bins (= channels) offers a vastly improved speed.

Are your expectations too high?

It is not good for the blood pressure to pursue the unattainable. Because it involves transmitting RF down a copper pair, with corresponding attenuation and other effects, your speeds will depend on your cable distance from the nearest exchange and of course, the cable distance will be more than the 'crow flying' distance.

Because ADSL gets progressively slower as the cable distance rises, it becomes marginal at 4km and will probably not work at all at 5km, although there can be exceptions.

I am lucky enough to be 167 metres cable length from my exchange and on ADSL2+ I enjoy at least 10Mbit/s and sometimes nearly 16Mbit/s download speeds, at the same time as 0.8Mbit/s upload speed, although the copper cabling here is not very good.

To put that in perspective, the download speed is up to over 283 times faster than a dial-up modem and 53,000 times faster than the old acoustic modems!

Because speed varies so much with cable distance and quality of connection, it is not possible to lay down hard and fast rules but there are many ISP and other sources on the net where you can compare your speeds to others in your area.

There's a possible fly in the ADSL ointment. You may be on a telephone line concentrator system, such as a RIM (Remote Integrated Multiplexer), where many lines are multiplexed and share a fibre (or even coax) link to the exchange.

Since ADSL is itself multiplexed there can be clashes and speed penalties. Your telco will tell you if you are on a RIM or similar concentrator and whether you can expect a good ADSL experience.

In fact, when you enquire about ADSL, one of the first things that happens is that you are asked for your phone number to check whether you are on a multiplexed system. Unfortunately, that's all that is checked – the line is not physically checked to see if ADSL is possible until you actually apply for the service.

Low speed, dropouts & throttling

Basically there are two types of trouble you can face as an ADSL subscriber: low speed and drop-outs. What about throttling? No, not the person at the ISP help desk, the speed.

Because this check is so simple it ought to be the first that you do. Many ISP plans have a data limit, after which data speeds are deliberately restricted or "throttled". This is irritating but you will probably agree that the alternative of receiving an unexpected bill for excess data usage would be a tad more annoying! Check via your ISP's website to see if you are being throttled.

Telephone line problems

Bearing in mind that ADSL is really a freak technology where we stuff RF signals down a copper pair that it was not designed for, for optimum speed and especially for freedom from drop-outs the line needs to be in good electrical condition. There are many joints in a phone line between you and the exchange as separate 'pairs' of wire are connected at street cabinets or pits. If any of those joints are faulty you will have problems.

DSL Glossary

ADSL
Asymmetric Digital Subscriber Line.
A digital subscriber line (DSL) technology in which the transmission of data from server to client is much faster than the transmission from the client to the server.

ATM
Asynchronous Transfer Mode.
A cell-based data transfer technique in which channel demand determines packet allocation. ATM offers fast packet technology, real time, demand led switching for efficient use of network resources.

Authentication
A security feature that allows access to information to be granted on an individual basis.

Auto-negotiation
Procedure for adjusting line speeds and other communication parameters automatically between two computers during data transfer.

Bandwidth
The range of frequencies a transmission line or channel can carry: the greater the bandwidth, the greater the information-carrying capacity of a channel.

Cross-talk
Signal currents being induced into neighbouring wires and causing errors.

bit
("BINary digiT")
A single unit of data, where there are only two possible states. The smallest amount which can be carried/transmitted.

bps
bits per second
A standard measurement of digital transmission speeds.

Bridge
A device that connects two or more physical networks and forwards packets between them.

Broadband
Characteristic of any network that multiplexes independent network carriers onto a single cable. This is usually done using frequency division multiplexing (FDM).

byte
(usually!) 8 bits = 1 byte; origin is the number of bits needed to define one text character.

DMT
Discrete Multitone
The leading method of signal modulation for DSL service. The usable frequency range is separated into 512 frequency bands (or channels) spaced 4.3125kHz apart. DMT uses the FFT (fast Fourier transform) algorithm as its modulator and demodulator.

Downstream rate
The line rate for return messages or data transfers from the network to the customer.

DSL
Digital Subscriber Line
A technology for bringing high-bandwidth information to homes and small businesses over ordinary copper telephone lines.

DSLAM
Digital Subscriber Line Access Multiplexer
A device at the telephone exchange which enables connection to multiple customers simultaneously.

Encapsulation
The technique used by layered protocols in which a layer adds header information to the protocol data unit (PDU) from the layer above.

FTP
File Transfer Protocol
The Internet protocol (and program) used to transfer files between hosts.

HTML
Hypertext Markup Language
The most common page-coding language for the World Wide Web.

HTML browser
(or web browser)
A browser used to traverse the world wide web.

http
Hypertext Transfer Protocol. The protocol used to carry world-wide web (www) traffic between a www browser computer and the www server being accessed.

Internet address
An IP address assigned in blocks of numbers to user organizations accessing the Internet.

Internet
A collection of networks interconnected by a set of routers which allow them to function as a single, large virtual network.

IP
Internet Protocol
The network layer protocol for the Internet protocol suite.

IP address
The 32-bit address assigned to hosts that want to participate in a TCP/IP Internet. Written as four numbers separated by dots.

ISP
Internet Service Provider
A company that allows home and corporate users to connect to the Internet.

LAN
Local Area Network
A data communications network restricted to a small area (often within one building or office)

Last mile	The final connection between the nearest exchange and the subscriber (for most people at the moment a copper pair).
Line rate	The speed by which data can be transferred over a particular line type, express in bits per second (bps).
Loopback	A diagnostic test that returns the transmitted signal back to the sending device after it has passed through a network or across a particular link. The returned signal can then be compared to the transmitted one.
MAC	Media Access Control Layer. A computer's interface to a physical network.
Multiplexer	A device that can send several signals over a single line. They are then separated by a similar device at the other end of the link.
NAT Network Address Translation.	Allows multiple computers to share one IP address.
Packet	The unit of data sent across a packet switching network.
PAP	Password Authentication Protocol.
Pair	The pair of copper wires making up an individual telephone circuit.
Port	The abstraction used by Internet transport protocols to distinguish among multiple simultaneous connections to a single destination host.
POTS Plain Old Telephone Service	Also known as PSTN – the public switched telephone network.
PPP Point-To-Point-Protocol.	Provides router-to-router and host-to-network connections over both synchronous and asynchronous circuits.
Protocol	A formal description of messages to be exchanged and rules to be followed for two or more systems to exchange information.
RIM Remote Integrated Multiplexer	Where many lines are locally multiplexed and share a link to the exchange. Often precludes ADSL.
Route	The path that network traffic takes from its source to its destination.
Router	A system responsible for making decisions about which of several paths network (or Internet) traffic will follow.
SNMP Simple Network Management Protocol	The network management protocol of choice for TCP/IP-based internets.
Split pair	Where the earth leg of one twisted pair is inadvertently swapped with the earth leg of another during jointing, leading to the noise cancelling effect of the twist being defeated.
Spoofing	A method of fooling network end stations into believing that keep-alive signals have come from and return to the host. Polls are received and returned locally at either end of the network and are transmitted only over the open network if there is a condition change.
Synchronous connection	During synchronous communications, data is not sent in individual bytes, but as frames of large data blocks.
TCP Transmission Control Protocol	The major transport protocol in the Internet suite of protocols providing reliable, connection-oriented full-duplex streams.
UTP Unshielded Twisted pair	Two insulated copper wires twisted together to reduce potential signal interference between the pairs.
Upstream rate	The line rate for message or data transfer from the source machine to a destination machine on the network. Also see downstream rate.
VC Virtual Connection	A link that seems and behaves like a dedicated point-to-point line or a system that delivers packets in sequence, as happens on an actual point to point network. In reality, the data is delivered across a network via the most appropriate route.
WAN Wide Area Network	A data communications network that spans any distance and is usually provided by a public carrier (such as a telephone company or service provider).

Flat patch lead at top and standard UTP (unshielded twisted pair) below. The twisted pair lead is preferable for minimising noise and interference.

Pick up your phone and dial 1. In the few seconds before the "number unobtainable" tone kicks in you should have absolute or very near silence (possibly a very faint steady hiss with some types of phone). There should definitely be no intermittent crackles (caused by bad joints) and no cross talk from other telephone users. Cross talk or hum may indicate a split pair somewhere on the route between you and the exchange. Is a split pair the same as split end?

A split pair is where the technician has in error used someone else's telephone earth line instead of yours. The phone still works because all the earth wires are connected together at the exchange but it is noisy, and ADSL does not like noise. The pair of telephone wires that make up your normal connection are twisted together in the multi-way cable that usually runs underground in ducts. The twists in the pair go a long way towards minimising noise because the noise currents in the adjacent wires balance out. But if by error your earth wire is really someone else's, it is no longer twisted with your other wire. The pairs are split and noise will result.

Returning to crackly joints, these are often far worse in extreme weather, by which I mean excessive heat or cold, or heavy rain. If you hear line noise, even when all other equipment is removed from your phone connection, there is a problem either inside or outside your premises. If inside you will need the services of a competent licenced cabler. If outside, your approach needs to be to Telstra or any other line retailer involved. Be careful here. You may be slugged with a charge if no faults are found, so do the other checks first. Also, you may be unlucky with your technician. Many a case has been marked as 'no fault found' when there was a glaring one. I have no magic solution to this human problem.

Patch leads & RJ plugs

How long is the patch lead joining your modem/router to the telephone point in your house? Such leads are usually not twisted, probably because it is cheaper to make flat ones. Although it's a comparatively short run, the interference-cancelling effect of a flat pair is much less than a twisted pair. I would recommend that patch leads be no longer than two metres. While we are considering the patch lead, internet problems may also be due to a loose RJ plug on the patch lead, where it has not been fully pressed home in the modem or telephone point.

Problems at given times

Internet users often experience drop-outs at specific intervals (every four hours is common) and these have turned out to be Securitel or similar auto-paging alarm units on the same line. For optimum internet speed and freedom from drop-outs, it is best to have only telephones (and possibly faxes), all with filters, on a line that is to carry ADSL traffic.

In one recent case of drop-outs exactly at 4-hourly intervals, it turned out to be a paging alarm system on another subscriber's line, with, you guessed it, a split pair.

Local RF Interference

In one case I assisted with, the user experienced a dramatic reduction of internet speed at 6PM every evening. He was convinced that his ISP was deliberately throttling his speed at peak times, that there were insufficient ISP servers etc.

Fortunately, he was not one to rush into un-researched blame and in due course he found by experiment that the problem was his new plasma TV which was switched on at 6PM for the news each evening. The switch-mode power supply was poorly screened and filtered (as is often the case) and it radiated pulses throughout the house and into his untwisted patch lead.

RF interference can even be caused by a faulty lamp, including an incandescent one that is 'singing' just before failing. To test for this, appliances should be completely disconnected one by one (not just switched to standby). (But do not emulate a certain friend who noted that if he switched off at his main fuse panel, the interference certainly stopped — but along with everything else…).

The sheer field strength of a nearby radio or TV broadcaster will result in some induced signals in nearby telephone lines. Your telephones are fitted with capacitors to reduce or eliminate rectified audio currents from interfering with normal telephony but the RF itself will often interfere with ADSL.

Why does RF interference matter?

We've looked at the modem/DSLAM combination and how it dynamically negotiates the best use of the big block of bins available to it. If there is interference on one or more of these bins, caused by harmonics or fundamental frequencies, the modem/DSLAM will agree together not to use it/them and so the total number in use reduces, leading to reduced overall speed.

Power interruptions

Some time ago, I was puzzled about drop-outs that I was suffering after upgrading from ADSL1 to ADSL2+ (a more 'fussy' technology, because the frequencies are higher). Previously, if power visibly failed for a few seconds (as it often did in thunderstorms), the modem would reset itself and consequently there was delay. This I understood but since the upgrade to ADSL2+, the drop-outs also happened at times when there was no flicker of the lights.

A small Uninterruptible Power Supply (UPS) for the modem and router solved this problem. Indeed, almost immediately after fitting the UPS it went into alarm mode several times, although the lights did not blink.

Here was the solution: power occasionally dipped for a few milliseconds, not enough for an incandescent lamp to flicker (because of thermal inertia) but certainly enough to cause the modem and router to reset.

Modems and routers

Although I have been lucky myself, there are many reported cases of these units becoming flaky. There is a tendency to leave them on continuously and thus heat fatigue may occur, particularly when there are underrated electrolytic capacitors fitted, which is the case with much overseas

equipment or when the mains voltage is abnormally high.

Modem and router firmware may need upgrading as manufacturers discover shortcomings in current versions. Sometimes settings may be lost for one reason or another and the modem or router may have to be reset to the factory configuration.

Although it is not always practical, the best way of eliminating the modem or router from your list of suspects is to borrow another; as long as you are quite sure you have set it up properly. Sometimes when the Net connection fails it is necessary only to perform a simple power reset of the modem/router, where you disconnect the low voltage power for 20 seconds or so (to let the electrolytics discharge) and then power it up again.

After a few minutes to let the ADSL connection become established, you may find that you have normal service.

Computer

My experience was that by far the biggest contributor to low internet speeds was the state of my own computer. Running XP it had become somewhat cluttered, with much software installed or de-installed over the years. Consequently the machine often 'froze'. By pressing CTRL-ALT-DEL on an XP machine you can see its operating state, via Windows Task Manager. The CPU usage is the critical figure. If this sits at 100% for more than a few seconds then the machine is in a virtual 'locked up' state and all your computing will experience considerable delays.

In my case, I had sufficient backups and original software CDs/DVDs to be able to clean off my hard disk and do a complete reload of everything. And I had another machine to work on while this was in progress.

I admit that it took many hours and I know it's not a luxury open to all but in my case when it was finished my internet speeds were revolutionised! When working at the computer I now make a point of calling up Windows Task Manager and then minimising it. On the task bar I can then see the loading of the CPU as a partially green square all the time.

Possibly, you are not able to perform (or risk) a complete reload from the start but at least, after taking good backups and verifying them, check your machine for viruses or other malware. Also, avoid having other applications running when on the Net and defrag your disk from time to time.

General infrastructure failure

The telephone network that we rely on so heavily can experience local or even national outages for a number of reasons. You can be sure that every effort is made to minimise the effects of this, especially if over a wide area, because the telco concerned is losing valuable revenue.

A reputable ISP will have a page on its website that will list outages and general locations (although admittedly this is of no value when you can't access it!). Phone help lines may also be a source of information. (I hear you groan — but remember that the help-desk jockey is a human being reading from a script).

We now come to less likely reasons for poor speeds or for drop-outs. Exchange DSLAMs are very reliable, since they feed many subscribers, perhaps up to 1,000 or more. If one is faulty it will give rise to many simultaneous complaints and is likely to be swapped out quickly.

Exchange congestion is a fairly rare occurrence, though some remote exchanges are notorious. Again, this is a leakage of potential revenue for the telco and the likelihood is that it will be fixed fairly quickly. Unfortunately, in these cases 'fairly quickly' for a telco may mean a number of months.

Portable Performance for Challenging Environments

Now you have the best of both worlds with the new THS3000 Series of handheld oscilloscopes from Tektronix. Whether you need to measure low voltage control signals or high voltage differential signals, the THS3000 is a handheld oscilloscope that thrives in both environments.

- Up to 200 MHz bandwidth and 5 GS/s sample rate
- 4 isolated channels and up to 7 hours of battery life
- 21 automated measurement & waveform math - Validate your device operation and identify issues quickly
- Data logging capability Find intermittent faults
  - TrendPlot™ function
  - capturing and replaying up to 100 display screens or set-up pass/fail waveform limits

The THS3000 series of handheld oscilloscopes is a complete and comprehensive solution providing you with the ability to make safe, accurate measurements in both bench and field environments

Visit TekMark Australia, Booth 5306 in NMW 2012 for demonstration. Alternatively, contact us on 1300 811 355 or email enquiries@tekmarkgroup.com

TM Tekmark making a difference

Tektronix

Incompetent or poorly resourced ISPs

I have placed this last because although it is possible I have never experienced it. I can only think that in this case subscribers would leave in droves and the ISP concerned would fold.

How can you tell if your ISP is the guilty party? I would like to say be guided by forum and newsgroup postings. Unfortunately this is not completely reliable. In the first place, among the millions of users there will be many who are experiencing your problem, even in your own immediate area, and are convinced they know the causes (invariably they cite the ISP).

Some posters pop up under cover of a different user name to their normal one, make a disparaging post and then disappear, possibly returning under another user name and agreeing with their own post.

Are they paid stooges from another ISP? Or are they genuinely frustrated and distressed? There is no way of checking. You could go by praise but to be fair, praise posts could also be made by stooges!

I can only be certain about my own experience. To paraphrase a certain person recently in the news, I am a happy little Vegemite now that I've cleaned up my computer and fixed my power outage problem. And all without any help-desk jockeys being harmed... SC

By NICHOLAS VINEN

PIC/AVR Programming Adaptor Board

Do you frequently program microcontrollers with a serial programmer? Want to streamline the process so you can quickly do virtually any micro? Well now you can! Our new Programming Adaptor Board, in combination with an In-Circuit Serial Programmer (ICSP), allows you to program most 8-bit & 16-bit PIC microcontrollers as well as 8-bit Atmel AVRs. It has a 40-pin ZIF socket and is configured with just a few DIP switches.

MOST EMBEDDED developers program their microcontrollers using an In-Circuit Serial Programmer such as the Microchip PICkit3 or the Atmel AVRISP MkII. These plug into the USB port on your PC and a header on the development board. The PC software (eg, Microchip MPLAB or Atmel AVR Studio) is then used to program or re-program the microcontroller.

This is handy while developing the project but you won't always have a complete circuit with a programming header when you need to program a micro.

It may be that the circuit operates at 230VAC mains potential and so you can't safely plug a programmer in. Or perhaps the circuit connects the micro's programming pins to other components which interfere with on-board programming. Maybe there just isn't room for the programming header on the board because it wouldn't fit or there is one but you can't get to it once the board is mounted in its case.

So often, it's just more convenient to pop the micro out and take it to a computer for programming.

In short, there are lots of reasons why you might want to program a micro but an in-circuit programmer alone won't do the job. That's where this board comes in. It forms a circuit for the microcontroller to operate in and provides the programming header connection and power supply. Once it's set up and the micro is locked into the ZIF socket, you fire up the serial programmer and program the chip as per usual.

At SILICON CHIP we used to wire up a socket on Veroboard every time we wanted to program a new chip but this is a pain. There are so many different pin configurations and power supply requirements that you end up with dozens of the things floating around. You also have to bend the IC pins to get it into a standard socket and then it can be difficult to pull out without mangling them.

Some programming adaptor boards available on the internet use multiple ZIF sockets to suit different micros. Unfortunately, good ZIF sockets are quite expensive so these boards usually use cheap ones which don't last very long. And you'd need an awful lot of them to support a large portion of the PIC range.

Features

This programming board supports over 400 different 8-bit and 16-bit PICs – around 90% of the currently available range. It also supports about 45 different Atmel microcontrollers, covering most of the popular ATtiny and ATmega micros. It is capable of programming the vast majority of microcontrollers used in SILICON CHIP projects in the last 10 years or so.

The programming adaptor board has a power supply since not all ICSP units can supply power to the micro. It also has soft-power control with over-current/short-circuit protection, to prevent damage to the micro in case something goes wrong.

The on-board power supply can provide 3.3V or 5V, depending on what the micro to be programmed needs. In addition, the micro is always inserted into the ZIF socket with pin 1 at upper left, making it easy to use.

Design

Before drawing up the circuit, we surveyed the entire range of 8-bit and 16-bit PICs and AVRs to figure out what proportion of the range we could support. There are nearly 500 different PICs in DIP packages with about 30 different pin configurations. The AVR range is smaller, with less than 100 parts and eight different pin-outs.

Supporting them all is a huge ask but we figured that with 17 different pin configurations (13 for PICs and four for AVRs) we could cover about 90%, including all the most popular micros ranging from 8-pin up to 40-pin DIP parts.

We have to connect different pins to V_{CC} and ground, depending on which micro is inserted. We also need to route the programming signals and voltages to the appropriate pins. For AVRs, it's also useful to be able to drive the clock pins with a square wave during programming as they don't automatically switch to the internal oscillator in programming mode (unlike PICs).

Having sorted out what was required, the next question was how to achieve it. Essentially, what we need is a type of sparse crossbar or matrix switch – think of a telephone exchange. We have a 40-pin socket, two power supplies rails (0V and 3.3V/5V), three or four programming signals/voltages and a couple of clock signals (we'll explain that later). We need to connect some combination of these for a given micro and ideally this should not involve a lot of effort for the user.

There are three obvious ways to do it: using jumper shunts, relays or electronic switches. We ruled the relay option out almost immediately; we would need at least 50 relays and it would have been a huge PCB.

Jumper shunts would be a cheap and cheerful solution but then you, the user, would have to spend time reconfiguring the board one pin at a time, based on a whole series of diagrams. That would be a recipe for a disaster and besides, technology is supposed to make your life easier!

So we decided on electronic switching using Mosfets. They are quite small and cheap and can easily be controlled by digital logic, making configuration a snap.

Circuit description

The resulting circuit is quite complicated, due to the large number of different configurations and how many pins need to be connected for each. So we have broken it up into sections, with Fig.1 showing the power supply switching and Fig.2 showing the control logic and serial data multiplexing. First, let's examine IC1-IC3 in Fig.2.

We are switching the serial programming signals using CMOS 1-to-8 analog multiplexer ICs (4051B). There are two such signals for PICs (PGD and PGC) and three for Atmel AVRs (MOSI, MISO and SCK). To simplify the circuit, we join PGD with MOSI and PGC with SCK; only one set is used at a time. These three programming lines are connected to the "Z" terminals on the ICs.

The active-low enable pins of these three ICs (EN-bar) are joined together. When they are pulled low, the "Z" ter-

Main Features & Supported Microcontrollers

Features

- Runs off a 9-12V DC plugpack or USB 5V power
- Programs most Microchip PICs and Atmel AVR microcontrollers in DIP
- Selectable 3.3V or 5V micro power supply
- Easy configuration – chip type selected with 8-way DIP switch
- Electronic fuse protects micro
- Uses high-quality, reliable 40-pin universal ZIF socket
- Compatible with PICkit3 and AVRISP MkII

Supported Microcontrollers

- Virtually all PIC12s, PIC16s and PIC18s
- Most PIC24s and dsPIC33s
- Most ATtinys and ATmegas
- Over 450 different microcontrollers supported – see panel on page 34

minals are connected to one of the "Y" terminals. Which one depends on the state of input pins A0-A2. If A0-A2 are all low for one IC, its "Z" is connected to "Y0". If S0 is high and the rest are low, giving a binary input of 1, "Z" is connected to "Y1" and so on.

We have specified HEF4051Bs, which are pin-compatible with the original 4051Bs but have half the on-resistance between connected terminals (40Ω).This is important for reasons that will be explained later.

The first three DIP switches in S1, labelled DIP0-DIP2, drive the A0-A2 inputs of these three ICs. The Y0-Y7 terminals of each are connected so that for each combination of DIP0-DIP2, one of the programming headers is connected to the appropriate pins for one type of micro. EN-bar is driven low simultaneously with the micro power supply being switched on, so that when the micro has no power, the programmer is disconnected.

IC1-IC3 run from 16V, slightly higher than the normally specified 15V but below the 18V maximum. They can therefore not only pass the 3.3V or 5V digital signals but also withstand the 13.5V which can be applied to the MCLR/V_{PP} pin when programming a PIC. In some cases, pin 1 is connected to V_{PP} and this pin is also connected to IC1, so it must be able to withstand this voltage.

Each programming pin connected to IC1-IC3 is also wired to a dual Schottky diode which is connected between the supply rails (D6-D8). These prevent the programmer (connected via CON1 or CON2) from driving the terminals of IC1-IC3 beyond their supply rails when the adaptor board power supply is switched off.

Programming voltage

The 13.5V mentioned earlier comes from the V_{PP} pin of CON1, the ICSP header for PICs. This is used to power the micro's internal flash programming circuit.

Because the PIC draws some current from this rail during programming, we can't use another HEF4051BT to route it, since the 40Ω series resistance would be an issue. Instead, we use discrete analog switches comprising surface-mount dual Mosfets Q18-Q21 – see upper left of Fig.1.

Each pair is connected drain-to-drain. One of the source terminals is connected to V_{PP} on the programming socket while the other is connected to one of pins 1, 4, 9 or 10 on the ZIF socket. The gates are tied together.

When the gates are held at 0V, both Mosfets are off since the source voltages are never below ground (0V). The body diodes are connected cathode-to-cathode so at least one is reverse biased and no current can flow through them either.

When the gates are pulled up together to +16V, the gate-source voltages will be in the range of 2.5-16V, depending on the source voltages. These are in the range of 0-13.5V. Even with just 2.5V between gate and source, the FDS6912A Mosfets switch on, applying V_{PP} to the connected pin. If the programmer pulls V_{PP} low, the micro pin will also go low as the analog switch allows current to flow in either direction.

When programming Atmel AVR microcontrollers, the reset pin is also used but the programmer only needs to pull it low, to enable the micro's programming mode. We have provided a reset pushbutton (S4 in Fig.2) which also pulls this line to ground. Sometimes, when a micro is already running code, you need to do this before you initiate programming.

There is a further difference with Atmel chips. If they have been configured to run from a crystal, ceramic resonator or external clock, they expect this to be present during programming as well as normal operation. This is in contrast to PICs which automatically switch to their internal oscillator when programming mode is enabled.

So that you can still program chips set up in this way (and many will be), the adaptor board can supply a clock signal to the micro. This works even if it is expecting an external crystal; as long as it gets a square wave on both clock pins it will operate.

This facility is provided by IC4 and IC5 which are also 4051Bs. When they are enabled, they apply the 1MHz square waves CLK and CLK-bar to the XTAL1 (clock input) and XTAL2 (clock output) pins of the micro. They are automatically disabled while programming PICs; CLKENA-bar and hence their EN-bar inputs are kept high.

Switching power

We also need to supply power to the micro. Some micros have a single pair of power supply pins (V_{CC} and GND) while others can have multiples of each. These pins must have a low source impedance at high frequencies (1MHz+) or else the micro will not operate correctly.

Fig.1: the ZIF socket and power supply switching (multiplexing) section of the programmer. The micro is placed in the 40-pin ZIF socket and Mosfets Q1a/b-Q25a/b connect the various pins to V_{CC}, GND and MCLR/V_{PP} as required. Some Mosfets also connect capacitors between pairs of pins as necessary. In addition, Mosfets Q26-Q29 connect serial programming lines PGC and PGD to pins 39 & 40 respectively, for high-speed programming of certain PICs.

Normally, this is achieved by connecting power supply bypass capacitors between each pair of supply pins. But we can't put capacitors directly between ZIF socket pins because while they may be used to supply power for one type of micro, another may use the same pins for serial programming. Large value capacitors would just shunt the programming signals to ground.

Instead, we have connected multiple low-ESR bypass capacitors between the V_{CCS} (micro power supply) and GND rails around the ZIF socket. We then switch those rails directly to the appropriate socket pins using low on-resistance Mosfets. The static on-resistance for the FDS6912As is about 0.02Ω and this is effectively in series with the bypass capacitor ESRs, for both V_{CC} and GND pins. The total supply impedance is therefore quite low (<0.1Ω).

In most cases, a single Mosfet switches power to one of the micro pins. For example, Q10a (right side) connects pin 36 to ground for MODE 2 while Q3b connects the same pin to V_{CCS} in MODE 3. In both cases, the gate is pulled to +16V to turn the Mosfet on and to 0V to turn it off.

However, for pins which share V_{PP} (~13.5V) and V_{CCS} (3.3V/5V), two Mosfets are connected drain-to-drain for V_{CCS}, just as they are to supply V_{PP}. For example, Q22a & Q22b (upper left) connect pin 1 to V_{CCS}. This is necessary to prevent the higher V_{PP} voltage from feeding back into V_{CCS} when it is turned on.

In total, there are 13 Mosfets connecting various pins to V_{CCS} and 12 for GND. Then there are an additional six

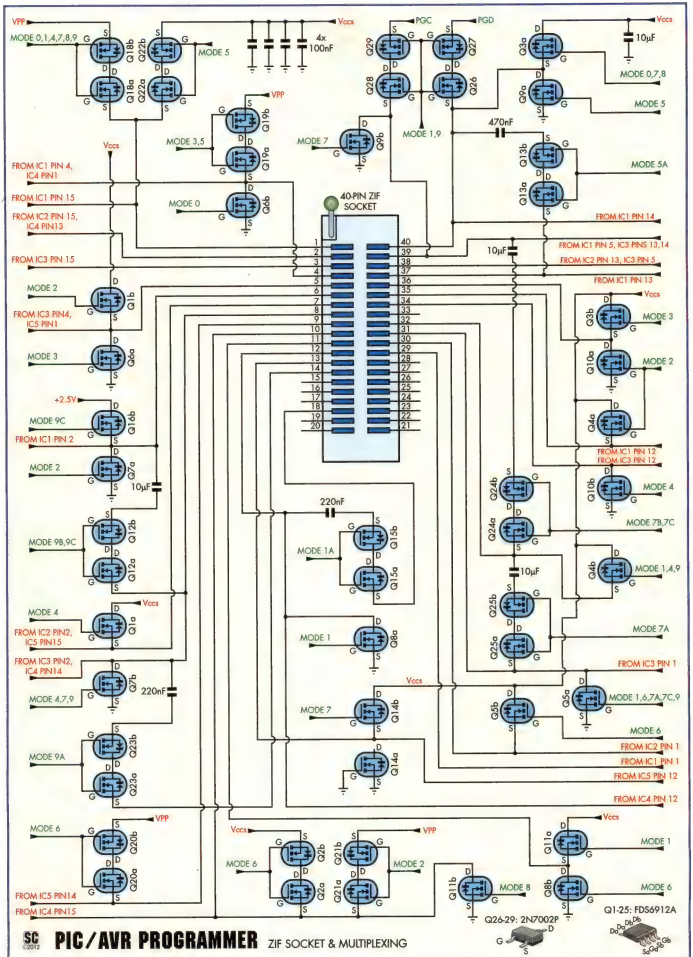
VPP
MODE 0,1,4,7,8,9
Q18b
Q22b
Q18a
Q22a
MODE 5
Vccs
4x
100nF
PGC
PGD
Q29
Q27
Q28
Q26
Vccs
10µF
Q3a
Q6a
MODE 0,7,8
MODE 5
VPP
Q19b
Q19a
MODE 3,5
MODE 7
Q9b
MODE 1,9
470nF
Q13b
Q13a
MODE 5A
Vccs
FROM IC1 PIN 4, IC4 PIN1
FROM IC1 PIN 15
FROM IC2 PIN 15, IC4 PIN13
FROM IC3 PIN 15
MODE 0
Q4b
40-PIN ZIF SOCKET
FROM IC1 PIN 14
10µF
FROM IC1 PIN 5, IC3 PINS 13,14
FROM IC2 PIN 13, IC3 PIN 5
FROM IC1 PIN 13
MODE 2
Q1b
FROM IC3 PIN4, IC5 PIN1
Vccs
Q3b
MODE 3
MODE 3
Q2a
Q10a
MODE 2
+2.5V
Q16b
MODE 9C
FROM IC1 PIN 2
Q4a
FROM IC1 PIN 12
FROM IC3 PIN 12
MODE 2
Q7a
10µF
Q24b
Q10b
MODE 4
220nF
Q15b
MODE 1A
Q15a
Q24a
MODE 7B,7C
MODE 98,9C
Q12b
Q12a
10µF
Q4b
MODE 1,4,9
Vccs
Q25b
MODE 4
Q1a
FROM IC2 PIN2, IC5 PIN15
MODE 1
Q8a
Q25a
MODE 7A
FROM IC3 PIN2, IC4 PIN14
Q7b
220nF
FROM IC3 PIN 1
Vccs
Q5b
Q5a
MODE 4,7,9
MODE 7
Q14b
MODE 1,6,7A,7C,9
MODE 6
MODE 9A
Q23b
Q23a
Q14a
FROM IC2 PIN 1
FROM IC1 PIN 1
FROM IC5 PIN 12
FROM IC4 PIN 12
MODE 6
Q20b
Q20a
VPP
Vccs
Q22b
Q21b
VPP
Vccs
Q11a
MODE 1
MODE 6
Q2a
Q21a
MODE 2
Q11b
MODE 8
Q8b
MODE 6
FROM IC5 PIN14
FROM IC4 PIN15
Q26-29: 2N7002P
Q1-25: FDS6912A
SC ©2012
PIC/AVR PROGRAMMER
ZIF SOCKET & MULTIPLEXING

Supported Microcontrollers
[x = any digit, (A) = with or without A suffix]

Microchip

PIC12F, PIC12HV: All [25]
PIC16F, PIC16LF, PIC16HV: All but PIC16F57 and PIC16F59 [149]
PIC18L, PIC18LF: All* [132]
PIC24E: All [8]
PIC24F: All** but PIC24F04KA20x, PIC24F04KLx00 and PIC24FJ16MC101 [29]
PIC24H: All but PIC24HJ12GP20x [14]
dsPIC33E: All [12]
dsPIC33F: All but dsPIC33FJxxGSxxx and those ending with -101 [26]

** PIC18F2331, PIC18F44J10 and PIC18F45J10 require an extra component in the ZIF socket.*

*** PIC24FxxKA30x (12 types) require an extra component in the ZIF socket.*

Atmel

ATtiny13(A)(V), ATtiny15L, Attiny25/45/85(V) [10]
ATtiny261/461/861(A)(V) , Attiny26(L) [11]
ATtiny2313(A)(V), Attiny4313 [4]
ATtiny48/88, Atmega48/88/168/328(P)(A)(V), Atmega8(A)(L) [21]
ATmega16/32(A)(L), Atmega164/324/644/1284(P)(A)(V) [20]
ATmega8535(L) [2]

Total: 463 fully supported, 15 programmable with additional components Note: some parts no longer in production have not been checked but are likely to work.

dual Mosfets (ie, a total of 12) which connect various capacitors between pins as required for some micros. These latter FETs are all configured as analog switches, in series with the capacitors. For example, Q12 (left side) connects a 10µF capacitor between pins 6 and 8, to filter the core supply voltage of certain micros (dsPIC33s and PIC24s).

Q16b supplies 2.5V to pin 6 if required. Q14a is unused and has its gate and source tied to ground. Three additional Mosfets are used in the power supply, to be described later. In total, there are 25 FDS6912A dual Mosfets surrounding the ZIF socket. This may seem like a lot but they are relatively cheap.

Parasitic capacitance

The problem with all these Mosfets is that even when switched off, they are effectively still present in the circuit. While the drain-source leakage current is very low and can be ignored, the output capacitance is an issue. This refers to the capacitance seen at the drain pin which is the sum of the drain-source and drain-gate capacitances.

This capacitance is highest (about 1nF) when the Mosfet's drain-source voltage is zero. As the drain-source voltage increases, it drops to about 150pF. With multiple Mosfets on a single pin, this can add up and in combination with the 40Ω resistance of the analog multiplexer ICs, IC1-IC5, it forms low-pass filters for the serial programming and clock signals. This limits the signals passed to a maximum of about 1.5MHz.

In most cases, this is not a problem. We tested the programming adaptor board with a variety of PIC and AVR chips (about 20 different types), using the PICkit3 and AVRISP MkII serial programmers. We found the programming speed was typically around 0.5MHz and it worked reliably in each mode.

There is one situation where the parasitic capacitance is an issue and this is when programming PIC18FJ devices. The PICkit3 uses a higher clock frequency for these, of about 2MHz. It is therefore necessary to have four small additional Mosfets, Q26-Q29. They form analog switches in parallel with IC1 and IC3, for routing the PGD and PGC signals to pins 40 and 39 respectively.

For PIC18FJs then, the series resistance to the programming signals drops to a couple of ohms, allowing the higher frequency signals to pass through.

These four additional Mosfets are 2N7002Ps. The 2N7002 is a surface-mount version of the 2N7000. The P suffix is important as it indicates a lower on-resistance (1Ω compared to 2.5Ω) which is required for reliable programming of PIC18FJs.

Control logic

All this switching is controlled by the circuitry shown in Fig.2. To program a particular micro, eight DIP switches (S1) are set to the appropriate positions. Each DIP switch is connected to a pull-down resistor, so if the DIP switch is off, the corresponding line labelled DIP0-DIP7 is 0V and if the switch is on, the line is at 16V.

DIP0-DIP3 configure the analog multiplexers IC1-IC5, described earlier, They are also connected to the four inputs (A0-A3) of CMOS 4028B BCD-to-decimal decoder IC6. Depending on the positions of DIP0-DIP3, one of its 10 outputs (O0-O9) is high and the rest are low. These outputs then drive the gates of some of the Mosfets shown in Fig.1, turning the appropriate ones on for that mode.

For example, in MODE 5, output O5 of IC6 goes high and turns on Mosfet Q9a, which connects pin 40 of the ZIF socket to ground. Some Mosfets must be turned on in more than one mode and so the 10 mode lines are also fed into nine OR gates: IC7a-IC7c, IC8a-IC8c and IC9a-IC9c. In some cases, these are cascaded. So when MODE 1, 4 or 9 is selected, the output of IC9b (MODE 1,4,9) is high and this turns on Mosfet Q4b, supplying 3.3V or 5V to pin 32 of the micro.

But the scheme described above only gives us 10 possible pin configurations and as we said earlier, we need 17. The additional seven configurations use the same power and programming pins as the other 10 but involve different combinations of capacitors connected between other pins and, in one case, an additional 2.5V supply.

The extra control signals are derived from the 10 mode signals and the positions of two more DIP switches, DIP4 and DIP5. This is achieved using eight 2-input AND gates, IC10a-IC10d and IC11a-IC11d, in combination with inverter gates IC12a-IC12c and 2-input

Parts List

1 PCB, code 24105121, 116 x 127mm (available from SILICON CHIP)
1 40-pin Universal ZIF socket, 0.6-inch wide pin spacing (Element14 1169111)
1 40-pin production DIL socket, 0.6-inch wide pin spacing
1 220µH bobbin inductor (Jaycar LF1104, Altronics L 6225)
1 1MHz or 1.008MHz crystal or 2-pin ceramic resonator (Rockby 10234, 13390 or 10233)
1 100kΩ 9-pin 8-resistor network (Element14 9356827)
1 6-way pin header strip (CON1)
2 10-way shrouded vertical IDC socket (CON2)
1 PCB-mount USB type B socket (CON3)
1 PCB-mount DC socket (CON4)
1 2-way polarised header, 2.54mm pitch (CON5)
1 3-way pin header strip and shorting block (LK2)
1 8-way DIP switch (S1) (Element14 1123941; Jaycar SM-1024; Altronics S3060)
3 PCB-mount tactile pushbuttons (S2-S4)
1 miniature PCB-mount SPDT slide switch (S5) (Element14 1123875)
5 M3 x 6mm machine screws
1 M3 shakeproof washer
1 M3 nut
4 M3 x 12mm tapped Nylon spacers

Semiconductors

5 HEF4051BT 8-way analog multiplexers [SOIC-16] (IC1-IC5) (Element14 1201291)
2 CD4028BM BCD-to-decimal decoders [SOIC-16] (IC6, IC17) (Element14 1753401)
2 HEF4071BT quad 2-input OR gates [SOIC-14] (IC7, IC8) (Element14 1085289)
1 CD4075BM triple 3-input OR gate [SOIC-14] (IC9) (Element14 1739910)
2 HEF4081BT quad 2-input AND gates [SOIC-14] (IC10, IC11) (Element14 1085290)
1 HEF4069UBT hex inverter [SOIC-14] (IC12) (Element14 1201295)
1 SN74HC04D hex inverter [SOIC-14] (IC13) (Element14 1311424)
1 HCF4013BM1 dual D-type flipflop [SOIC-14] (IC14) (Element14 1094187)
1 OP07CD precision op amp [SOIC-8] (IC15) (Element14 1575526)
1 LM293D dual low-power comparator [SOIC-8] (IC16) (Element14 2292944)
1 7805T 5V 1A linear regulator (REG1)
1 AP1117E33 3.3V low-dropout linear regulator [SOT-223] (REG2) (Element14 1825291)
1 SPX1117M3-L-2-5 2.5V low-dropout linear regulator [SOT-223] (REG3) (Element14 1831943)
1 MC34063ADG switchmode controller [SOIC-8] (REG4) (Element14 1211119)
25 FDS6912A dual independent N-channel Mosfets [SOIC-8] (Q1-Q25) (Element14 1095019)
4 2N7002P N-channel Mosfets [SOT-23] (Q26-29) (Element14 1859848)

Diodes & LEDs

1 1N5819 1A Schottky diode (D1)
3 1N4148 small diodes (D2-D4)
1 1N4004 1A diode (D5)
3 BAT54S dual series Schottky diodes [SOT-23] (D6-D8; Element14 1467519)
1 Green 3mm LED (LED1)
1 Yellow 3mm LED (LED2)
1 Red 3mm LED (LED3)

Capacitors

4 100µF 16V electrolytic
2 47µF 25V electrolytic
1 10µF 16V electrolytic
4 10µF 6.3V SMD X5R ceramic [3216/1206] (Element14 1833825)
1 470nF MKT
2 220nF 50V SMD X7R ceramic [3216/1206] (Element14 1362557)
11 100nF 50V SMD X7R ceramic [3216/1206] (Element14 1301906)
14 100nF MKT
1 470pF disc ceramic
2 33pF disc ceramic

Resistors (1%, 0.25W)

1 1MΩ	1 4.7kΩ
1 100kΩ	3 2.2kΩ
1 68kΩ	1 1.1kΩ
5 47kΩ	2 1kΩ
1 13kΩ	1 220Ω

1 1Ω (1% or 5%)
1 0.1Ω SMD [3216/1206] (Element14 1865244)

OR gate IC7d. The additional modes are labelled A, B and C and are selected by switching DIP4 on (mode A), DIP 5 on (mode B) or both on (mode C).

If MODE 9 is selected and both DIP4 and DIP5 are on (high), the output of AND gate IC10a (MODE 9B,9C) is high, as is the output of AND gate IC10c (MODE 9A,9C). As a result, the output of IC10b (MODE 9C) is also high. With MODE 9B,9C and MODE 9C both high, Mosfets Q12a and Q12b connect a 10µF capacitor between pins 8 and 6 while at the same time, Q16b turns on, supplying 2.5V to pin 6. This suits PIC18LF2xJ5x microcontrollers.

Inverter stages IC12e and IC12f are unused, so their inputs are tied to +16V to prevent oscillation. Two-input OR gate IC8d is also unused and connected similarly.

Clock generator

Fig.2 also shows the crystal oscillator circuit which is based on hex inverter IC13, a 74HC04D. IC13a forms the oscillator in combination with crystal X1, two 33pF load capacitors, a 1MΩ biasing resistor and a 4.7kΩ current-limiting resistor. The 1MHz clock signal is then buffered by IC13b and IC13f which are paralleled for increased drive strength. This signal then passes to IC5, to be connected to the micro's XTAL1 (clock input) pin, when enabled.

This clock signal is inverted again, by IC13c-IC13e (also paralleled) and this signal passes to IC4, which routes it to the micro's XTAL2 (clock output) pin, if enabled.

Both inverters must charge and

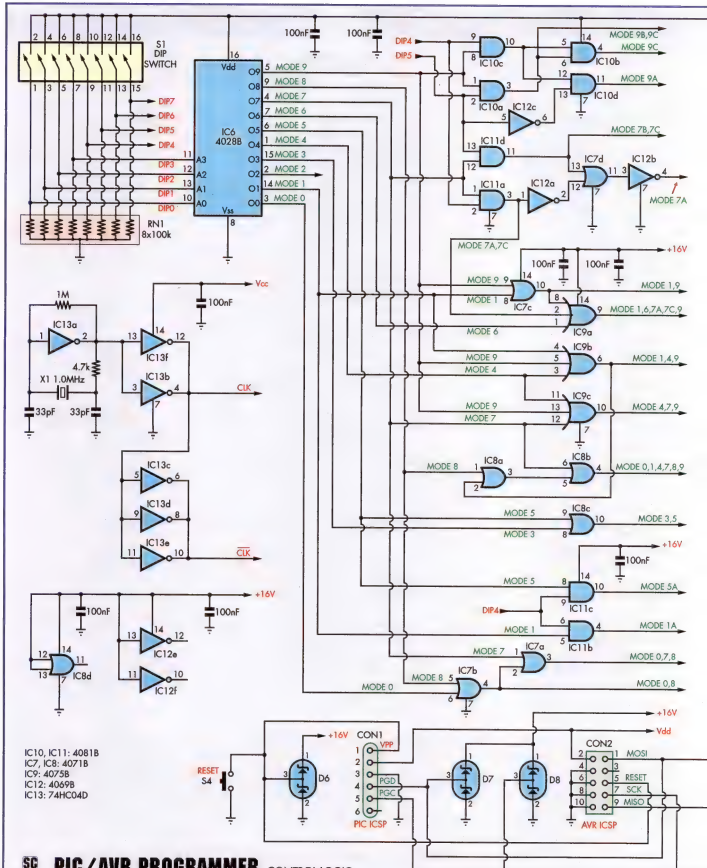

PIC/AVR PROGRAMMER CONTROL LOGIC

Fig.2: the control logic for the adaptor board is shown at left, while IC1-IC5 (HEF4051Bs) connect the serial programming and clock lines to various pins on the ZIF socket (see Fig.1). 8-way DIP switch S1 selects the micro to be programmed and the switch states are decoded using the various logic ICs, to drive the appropriate Mosfets and analog switches.

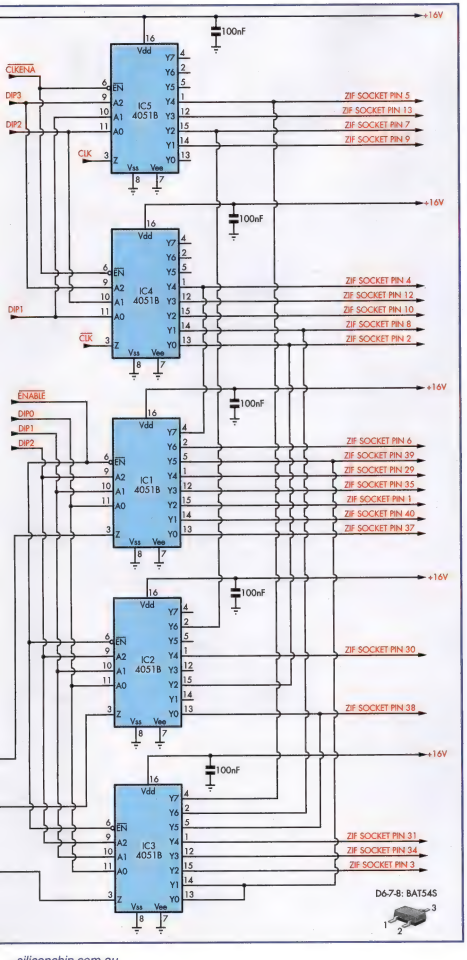

discharge the parasitic capacitance at the target pin at 1MHz. This could be a couple of nanofarads. Their load impedance can be up to $40\Omega + (1 \div (2\pi \times 1\text{MHz} \times 2\text{nF})) = 120\Omega$, hence the use of multiple inverters in parallel.

Unfortunately, 1MHz crystals are not as common as 2MHz crystals. The circuit will work with a 2MHz crystal but the dissipation in IC4 and IC5 increases due to the increased current required to drive the load capacitance at the higher frequency. We did not experience any failures in our prototypes but cannot vouch for the long-term reliability of the circuit if using such a crystal.

If you do use a 2MHz crystal, avoid leaving the clock and micro power enabled for long periods, when programming at 5V. This is not an issue when programming PICs.

Power supply

Refer now to Fig.3 which shows the power supply. The unit can run from either a 9-12V DC plugpack or a USB port. The plugpack is connected to CON4 and this disconnects the USB ground pin so that power can't flow back into the USB port. D5 provides reverse polarity protection and REG1 then drops the supply voltage to the required 5V. For USB, 5V is drawn straight from the socket.

Either way, slide switch S5 acts as the power switch and when on, green LED1 lights up. The 5V rail is reduced to 3.3V by REG2, a low-dropout (LDO) linear regulator. These 5V and 3.3V rails provide the two power options for the micro.

The 5V rail also powers REG4, an MC34063 switchmode regulator. This switches current through inductor L1 (a 220µH choke) and in combination with Schottky diode D1, generates the +16V logic supply. This only needs to deliver a few milliamps since the logic is all static. The ratio of the 13kΩ and 1.1kΩ resistors sets the output voltage to $1.25 \times (13\text{k}\Omega \div 1.1\text{k}\Omega + 1) = 16.02\text{V}$.

LK1 allows the power supply to be tested before voltage is applied to the rest of the circuitry. This is shorted for normal operation.

Voltage selection

Mosfets Q17a and Q17b switch the 3.3V and 5V rails to the micro respectively; only one can be on at a time. Q17a turns on when DIP6 is high but Q17b is only indirectly controlled by

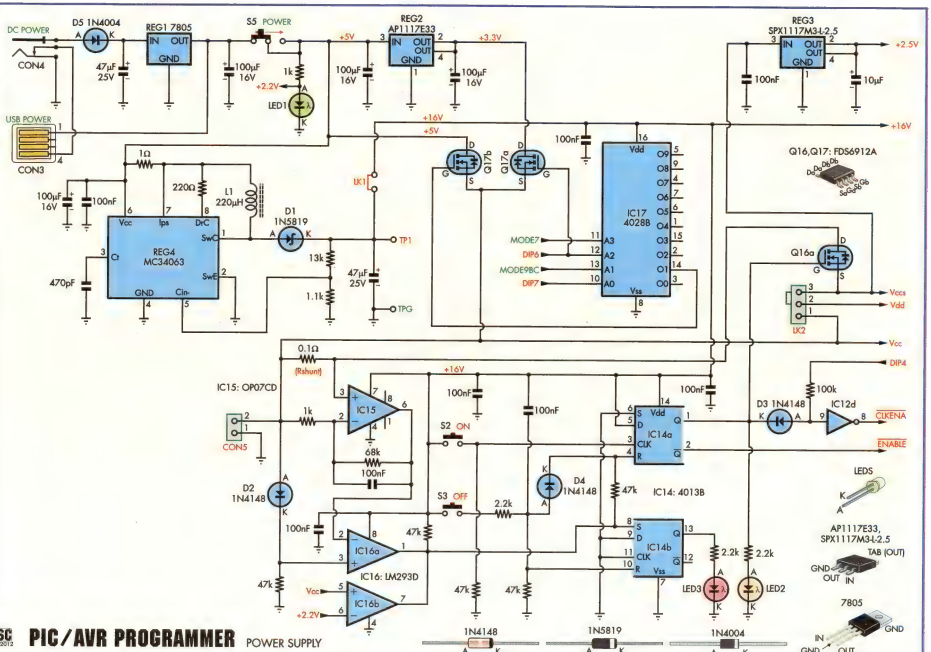

SC ©2012 **PIC/AVR PROGRAMMER** POWER SUPPLY

Fig.3: the adaptor power supply. Power comes from a 9-12V DC plugpack or a USB cable. From these, 16V, 5V, 3.3V and 2.5V rails are generated. 16V powers the logic while the rest can supply the micro. IC14 controls power to the micro with IC15 and IC16 monitoring the current flow. If the current limits is exceeded, IC14 turns the power off and turns on red LED3.

DIP7. IC17, another 4028B BCD-to-decimal decoder, is between the two.

We don't want Q17b to turn on if Q17a is on as this would short the 3.3V and 5V supplies together. Q17b is also disabled if the programmer has been set up for a micro which will be damaged by 5V. So for Q17b to come on, DIP6 must be off, DIP7 on and neither Mode 7 (for dsPIC33s) nor Modes 9B or 9C (for PIC24s) should be enabled.

Since Q17b's gate is connected to output O1 (pin 14) of IC17, it will only turn on if input A0 is high and inputs A1-A3 are low, giving a binary input value of 1. This can only occur under the conditions specified above.

Electronic fuse

Whichever supply voltage is selected, current then flows from Q17a or Q17b through Rshunt (0.1Ω) and then through Q16a, to the micro's V_{CCS} (switched V_{CC}) supply. Q16a is the soft-power switch and this allows power to the micro to be cut quickly in an over-current condition.

This condition is detected by the voltage across Rshunt rising to a certain level. The voltage across it is amplified by precision op amp IC15 and monitored by comparator IC16a. With 100mA through Rshunt, there is just 10mV across it. If IC16a monitored this directly, its maximum offset voltage of ±9mV would mean an error of up to ±90mA. That's clearly too much, given that we want a nominal current limit of around 100mA.

By comparison, IC15 has a very low maximum input offset voltage (0.15mV). It is configured for a gain of 69, ie, (68kΩ + 1kΩ) ÷ 1kΩ. This reduces the error due to IC16b's offset voltage to around ±1.5mA. A 100nF feedback capacitor provides a time delay (of about 1ms) so that very brief current transients do not trip the current limit.

This is necessary since when power is first applied, the charging of the supply bypass capacitors causes a brief current spike which could otherwise cause a nuisance trip.

IC15's output is relative to V_{CC} and is negative, ie, the more current that flows through Rshunt, the lower IC15's output voltage is. The reference voltage it is compared against must also be relative to V_{CC} and this is generated with small signal diode D2 and a 47kΩ load resistor. The drop across this 1N4148 diode is quite predicable at around 0.6V.

In combination with IC15's gain, this sets the current limit to about 90mA (0.6V ÷ 69 ÷ 0.1Ω). If the micro draws any more than this during programming, IC16a's output goes high and the supply switches off. This was sufficient for programming all micros that we tested.

There is an additional consideration; when the micro supply is off, input pins 2 and 3 of op amp IC15 are outside its normal operating range (1-15V). Its output is therefore undefined and it could switch power off before V_{CC} rises to a normal level.

Comparator IC16b prevents this. It compares V_{CC} against the 2.5V rail and so its output remains low until V_{CC} rises above the 2.2V reference derived from LED1. Since the outputs of IC16a and IC16b are connected together, this prevents the over-current signal from being asserted until the supply voltage is high enough for IC15 to monitor the current through Rshunt.

Power control

IC14a is a flipflop which drives the gate of Q16a and hence controls power to the micro. Its pin 4 reset input is driven by comparator IC16a, mentioned earlier. If excessive current flow is detected and IC16a's output goes high, the 47kΩ resistor pulls pin 4 of IC14a high and this resets IC14a, cutting power to the micro.

IC14a's "set" input (pin 6) is tied to ground and its data input (pin 5) is pulled high. It is therefore switched on by a positive transition on clock input pin 3. The clock pin is driven by pushbutton S2 with an associated 47kΩ pull-down resistor, hence pressing S2 turns the micro power on.

Similarly, pushing S3 turns the power off since this pulls the reset input (pin 4) high via a 2.2kΩ resistor and diode D4. IC14a is also reset initially by the 100nF capacitor from D4's anode to +16V, so micro power is off when the unit is first switched on.

IC14b, the other half of the dual flipflop IC, is used to indicate if an over-current trip occurs. When the output of comparator IC16a goes high, it not only resets IC14a but also sets IC14b via pin 8. This turns on red LED3 to indicate a fault. This LED can then be turned off using pushbutton S3 (power off) since this pulls its pin 10 reset input high.

When the output of IC14a is high and Mosfet Q16a is on, supplying power to the micro, yellow LED2 is also lit. IC14a also drives the input of inverter stage IC12d, which enables clock signal multiplexers IC4 and IC5. DIP4 must also be on for the clock enable to be asserted as otherwise, pin 6 of IC12d remains low.

Pin header CON5 can be used to monitor V_{CC} externally and if necessary, provide an off-board micro power supply. Three-pin header LK2 selects whether the ICSP receives power at the same time as the micro or when the programming adaptor board is switched on. It is usually left in the position shown, with pins 2 and 3 shorted, selecting the former condition.

LDO regulator REG3 derives 2.5V from V_{CCS} (3.3V or 5V) when Q16a is on. This is required when programming PIC18LF2xJ5x micros.

More to come

Next month, we will provide the PCB overlay diagrams and the construction details. We'll also detail the set up and describe how to use the Programming Adaptor Board. SC

Measure and control temperature over a wide range with this . . .

By JOHN CLARKE

High-Temperature Thermometer/Thermostat

Need to measure or control temperature over a very wide range? Now you can do it with this compact unit which hooks up to a K-type thermocouple. It drives a relay which can be used to precisely control the temperature in ovens, kilns, autoclaves, solder baths or at the cold end of the spectrum, fridges and freezers. It is based on an Analog Devices AD8495 precision instrumentation amplifier with thermocouple cold junction compensation.

NOW WE KNOW that some digital multimeters can measure temperatures with a K-type thermocouple but that's all they can do; they cannot control the temperature in an oven etc. In other words, they do not provide an adjustable thermostat function. In all the above examples, our new High-Temperature Thermometer/Thermostat can be used to measure and control the temperature at the same time. That's because it has a relay output that opens or closes at a preset temperature.

The switched output can be used directly or in conjunction with a higher-rated relay to control power to the element of a heater or the compressor of a refrigerator. For heating, the power can be switched on when the temperature is below the preset temperature and switched off when it is above. Alternatively, for cooling, power can be switched on when the temperature goes above the preset and off when it goes below. The preset temperature for this thermostat action can be adjusted between -50°C and 1200°C.

It is important that the thermostat function does not cause rapid on and

Features & Specifications

Main Features

- K-Type thermocouple probe
- Ground referenced or insulated probe can be used
- Measures -50°C to 1200°C (depending on probe)
- Pre-calibrated temperature measurement
- Optional calibration of span and offset adjustment
- Thermostat switching at a preset temperature with adjustable hysteresis
- High to low or low to high thermostat threshold
- Relay output for thermostatic control
- Relay contacts rated at 10A (30V AC/DC maximum recommended switching voltage)

Specifications

Power supply: 12V @ 100mA

Measurement range: -50°C to 1200°C (probe dependent)

Initial accuracy: ±4°C for -25°C to 400°C measurements (ambient between 0°C and 50°C)

Optional calibration adjustment for span: -4%, +5.27%

Optional calibration adjustment for offset: ±6.2mV equivalent to >±1°C

Thermostat set point range: adjustable from -50°C to 1200°C

Thermostat hysteresis: adjustable from <1°C to >9°C

Cold junction compensation: optimised for 0-50°C ambient temperatures

off switching of the heater, compressor or whatever is being temperature-controlled. Hence the design incorporates adjustable hysteresis. This allows a preset temperature difference to apply between switching power on and off. The hysteresis is adjustable from less than 1°C to more than 9°C.

The temperature is displayed on a 3½ digit LCD and while the unit can display a temperature from -50°C to 1200°C the actual measurement range will depend on the particular probe. Some K-type probes will operate from -50°C to 250°C, while others will operate from -40°C to 1200°C.

The High-Temperature Thermometer/Thermostat is housed in a small instrument case and controls on the front include a power switch and a switch to select between measured temperature and the preset thermostat temperature. A LED indicator is for power indication and a second LED shows when the thermostat relay has switched on.

At the rear of the case is the power input socket for a 12V DC supply and a socket for the K-type thermocouple. Additionally, there is a terminal connector inside the case for connection to the thermostat relay contacts. The common (C), normally open (NO) and normally closed (NC) contacts are available for connection.

Inside the case there are jumper links to select whether the thermostat relay switches on above or below the preset temperature for the thermostat. There are also jumper selections to select whether the Thermometer/Thermostat is built pre-calibrated or where the temperature calibration can be accurately adjusted.

K-type thermocouple

As mentioned above, this design uses a K-type thermocouple which comprises a junction of two dissimilar wires; in this case it uses an alloy of chrome and nickel (called Chromel) for one wire and an alloy of aluminium, manganese, silicon and nickel (called Alumel) for the second.

These two wires are insulated and make contact at the temperature probe end only. The other end of the wires are usually connected to a 2-pin plug.

Basically, a thermocouple's operation relies on the principle that the junction of two dissimilar metals produces a voltage that is dependent on temperature. A K-type thermocouple produces a voltage output that typically changes by 40.44µV/°C. This change in output per is called the Seebeck coefficient and it refers to the output change that occurs due to the temperature difference between the probe end and the plug end of the thermocouple.

In practice, the Seebeck coefficient for the K-type thermocouple varies with temperature and is not precisely 40.44µV but this is a good average value over the temperature range from 0°C to 1200°C.

If we know the temperature at the plug end of the thermocouple, we can calculate the temperature at the probe since we also know the Seebeck coefficient. For example, if the plug end is held at 0°C, the output will increase by 40.44µV for every 1°C increase. Similarly, the output will decrease by 40.44µV for every 1°C drop in temperature.

In practice, we do not keep the plug end of the thermocouple at 0°C; it's not practical. Instead, we compensate the thermocouple output by measuring the temperature at the plug end and then adding 40.44µV for every 1°C that the thermocouple plug end is above 0°C or subtracting 40.44µV for every 1°C that the plug end is below 0°C.

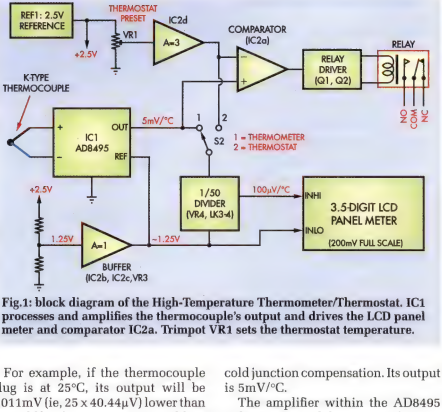

Fig.1: block diagram of the High-Temperature Thermometer/Thermostat. IC1 processes and amplifies the thermocouple's output and drives the LCD panel meter and comparator IC2a. Trimpot VR1 sets the thermostat temperature.

For example, if the thermocouple plug is at 25°C, its output will be 1.011mV (ie, 25 x 40.44µV) lower than it would be if it were at 0°C. By adding an extra 1.011mV to the reading, we obtain the correct result without having to keep the plug end at 0°C.

Note that there are several dissimilar metal junctions within the connections between the thermocouple plug and amplifier. These include the Chromel to copper junction and the Alumel to copper junction on the PCB itself. These do not contribute to the overall voltage reading provided they are all kept at the same temperature.

As a result, the PCB has been designed to help maintain similar temperatures at these junctions by making the copper connections all the same size. Once the PCB is installed inside its case, the inside temperature should remain fairly constant for all these junctions.

Note that if the thermocouple lead needs to be extended, it's necessary to use the same K-type thermocouple wire for the whole length between the probe and plug.

Signal processing

Refer now to Fig.1 which shows the block diagram of the High-Temperature Thermometer/Thermostat. As shown, the thermocouple signal is processed using the Analog Devices AD8495 IC. This is a precision instrumentation amplifier with K-type thermocouple cold junction compensation. Its output is 5mV/°C.

The amplifier within the AD8495 is laser trimmed for a gain of 122.4. This gain effectively converts the 40.44µV/°C output of the thermocouple to 4.95mV/°C. The output is optimised for a 25°C measurement where a gain of 122.4 gives a result of 123.75mV.

Within the AD8495, a 1.25mV offset is added to the amplified value, giving a 125mV output at 25°C. For temperatures other than 25°C, the combination of the variation in the Seebeck coefficient over temperature, the 122.4 gain and the 1.25mV offset provides an accurate 5mV/°C output over the range of -25°C to 400°C. For this range, the output is within 2°C.

Note that the specification panel shows that the accuracy is ±4°C for ambient between 0°C and 50°C and -25°C to 400°C measurements. This is different to the 2°C error for the AD8495 because the display is showing a reading via a voltage divider that is prone to extra tolerance errors.

It's possible to calibrate the measurement to a finer accuracy if this is required. Table 1 shows the expected output from the AD8495 over a wide range of temperatures and compares this with the ideal 5mV/°C output.

How it works

Returning now to the block diagram of Fig.1, the K-type thermocouple connects directly to the AD8495 (IC1) at the IN+ and IN- terminals. The resulting 5mV/°C output signal from IC1 is then fed to the non-inverting input of comparator IC2a and also to position 1 (Temperature) on switch S2. S2 selects between the Temperature and Thermostat modes of operation.

In order to allow for negative temperature measurements, the output from the AD8495 is offset by approximately 1.25V. This offset is derived by a voltage divider connected across a 2.5V reference (REF1) and buffered using op amps IC2b and IC2c. The buffered 1.25V signal is then applied to the AD8495's REF (reference) input.

This effectively "jacks up" the AD8495's output by 1.25V. As a result, a -50°C measurement now gives an output that's theoretically 250mV below (-5mV x 50) the 1.25V reference offset (ie, 1V). Without this offset, the AD8495 would not be able to handle negative temperature measurements since its output cannot go below 0V.

Although the offset only needs to be 250mV to allow for a -50°C measurement, a value of 1.25V is used because of the LCD panel meter that's used to measure the voltage. This meter requires an input that's at least 1V above the 0V supply for correct operation. According to Table 1, the actual output from IC1 at -50°C is 228mV below the offset voltage. So using an offset of 1.25V leaves us with a comfortable 22mV margin above the critical 1V level.

The 3.5-digit LCD panel meter used to display the temperature has a 200mV full scale reading (actually 199.9mV) for a reading of 1999. It's basically connected to measure the voltage between IC1's output (via a divider) and the offset voltage. This effectively removes the offset voltage from the reading.

To prevent the meter from overranging and to get a reading in °C, we need to divide IC1's output by 50. For example, if the temperature is 1200°C, the voltage between IC1's output and the 1.25V offset will be 6V (ie, 1200 x 5mV). Dividing this by 50 gives 120.0mV and the panel meter is configured to show 1200 (ie, no decimal point).

Note that, in the full circuit, either a fixed divide-by-50 attenuator or an adjustable divide-by-50 attenuator can be used. The desired attenuator is selected using jumper links and

the adjustable one allows for accurate calibration.

The display can either show the measured temperature when switch S2 is in position 1 or the preset temperature (for the thermostat operation) when S2 is in position 2. VR1 sets the thermostat temperature. As shown, it's connected to a 2.5V reference (REF1) and the voltage at its wiper drives op amp IC2d.

As a result, IC2d's output can range up to 7.5V, slightly more than the 7.25V at IC1's output when the measured temperature is at the 1200°C maximum (ie, 1200 x 5mV plus the 1.25V offset). This allows VR1 to set the thermostat temperature anywhere from -50°C to 1200°C.

IC2d's output is fed to the inverting input of comparator IC2a where it is compared with IC1's output. IC2a's output thus switches low when the temperature is below the preset and high when the temperature is above the preset. This output then drives a relay via transistors Q1 and/or Q2.

Links LK5 and LK6 can be selected so that the relay either switches on when IC2b's output goes high or on when it goes low.

Circuit details

Refer now to Fig.2 for the full circuit diagram of the High-Temperature Thermometer/Thermostat. As well as the AD8495 (IC1) and the LCD panel meter, it includes an OP747 precision quad op amp (IC2), a 7805 3-terminal regulator, an LM285-2.5 precision voltage reference, transistors Q1 & Q2 and various minor components.

IC1 is powered from a 12V DC plugpack supply via switch S1, diode D1 (for reverse polarity protection) and a 10Ω resistor. A 22V zener diode (ZD1) clamps any over-voltage transients while 100µF and 100nF capacitors are used to bypass the supply.

In operation, IC1 draws just 180µA to minimise internal heating (note: internal heating would affect the measurement of the ambient temperature used for the thermocouple ice-point temperature compensation). The K-type thermocouple connects to its IN+ and IN- terminals (pins 8 & 1) via series 47kΩ resistors. These resistors and their associated 100nF ceramic capacitors prevent RF (radio frequency) signals from being detected by IC1's sensitive input stages. The resistors acts as RF stoppers, while the

Table 1: AD8495 Output vs. Temperature

Thermocouple Temperature (°C)	Ideal Output @ 5mV/°C (mV)	AD8495 Output (mV)	Display Reading (°C) ±1 Digit
-50	-0.25	-0.228	-46
-40	-0.2	-0.184	-37
-20	-0.1	-0.093	-19
0	0.0	0.003	0
20	0.1	0.100	20
25	0.125	0.125	25
40	0.2	0.200	40
60	0.3	0.301	60
80	0.4	0.402	80
100	0.5	0.504	101
120	0.6	0.605	121
140	0.7	0.705	141
160	0.8	0.803	161
180	0.9	0.901	180
200	1.0	0.999	199
220	1.1	1.097	219
240	1.2	1.196	239
260	1.3	1.295	259
280	1.4	1.396	279
300	1.5	1.497	299
320	1.6	1.599	320
340	1.7	1.701	340
360	1.8	1.803	361
380	1.9	1.906	381
400	2.0	2.010	402
420	2.1	2.113	423
440	2.2	2.217	443
460	2.3	2.321	464
480	2.4	2.425	485
500	2.5	2.529	506
520	2.6	2.634	527
540	2.7	2.738	548
560	2.8	2.843	569
580	2.9	2.947	589
600	3.0	3.051	610
620	3.1	3.155	631
640	3.2	3.259	651
660	3.3	3.362	672
680	3.4	3.465	693
700	3.5	3.568	713
720	3.6	3.670	734
740	3.7	3.772	754
760	3.8	3.874	774
780	3.9	3.975	795
800	4.0	4.076	815
820	4.1	4.176	835
840	4.2	4.275	855
860	4.3	4.374	875
880	4.4	4.473	895
900	4.5	4.571	914
920	4.6	4.669	934
940	4.7	4.766	953
960	4.8	4.863	973
980	4.9	4.959	992
1000	5.0	5.055	1011
1020	5.1	5.150	1030
1040	5.2	5.245	1049
1060	5.3	5.339	1068
1080	5.4	5.432	1086
1100	5.5	5.525	1105
1120	5.6	5.617	1123
1140	5.7	5.709	1141
1160	5.8	5.800	1160
1180	5.9	5.891	1178
1200	6.0	5.980	1196

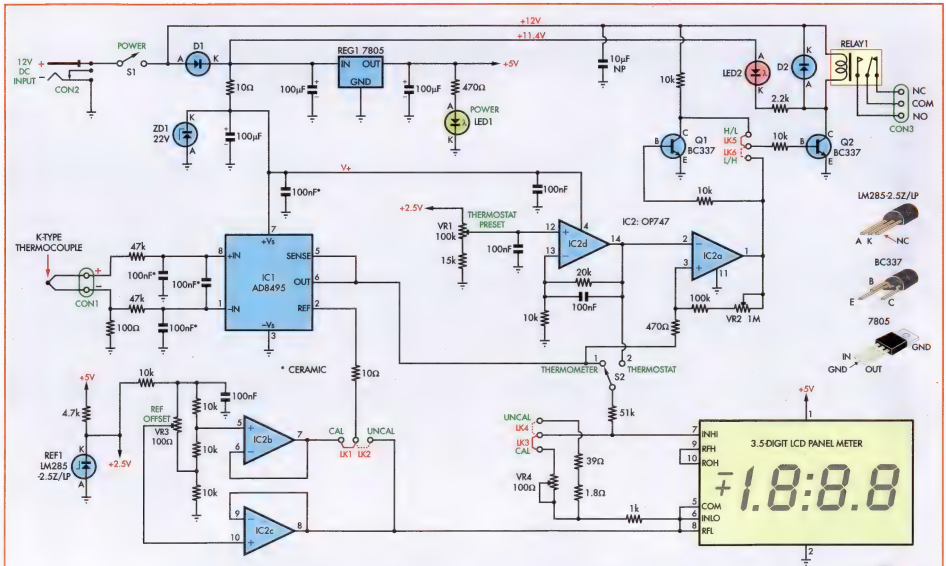

HIGH TEMPERATURE THERMOMETER / THERMOSTAT

Fig.2: the complete circuit diagram for the High-Temperature Thermometer/Thermostat. An accurate 1.25V reference is derived from REF1 via IC2b or IC2c and this is applied to the REF input of IC1 to enable measurements down to -50°C. IC1's output drives the LCD panel meter via a 50:1 divider and also drives the non-inverting input of comparator IC2a. IC2a compares IC1's output with the thermostat preset temperature, as set by VR1 & IC2d, and drives relay 1 via transistors Q1 and/or Q2 when the preset limit is reached. Links LK5 & LK6 allow the relay to be driven on either a rising or falling temperature.

100nF capacitors effectively shunt any remaining RF signal to ground.

In addition, the negative terminal of the K-type thermocouple is tied to ground via a 100Ω resistor. This prevents the probe from picking up noise and mains hum, which would cause erratic operation.

Note that the 100Ω resistor is included so that the circuit can be used with both earthed and insulated-sheath thermocouples. Basically, the thermocouple probe wires are housed in a cylindrical metal sheath or rod. Some units connect the negative thermocouple wire directly to this metal sheath (an earthed probe), while others fully insulate the metal sheath from the thermocouple wires (an insulated probe).

For an insulated probe, it doesn't matter whether the negative terminal is connected directly to ground or connected to ground via a 100Ω resistor. That's because an insulated probe can connect to a point that's not at 0V without affecting the operation of the probe.

By contrast, an earthed probe does require the 100Ω resistor. That's because the probe could make an external connection to the 0V supply rail and this might not be at exactly the same voltage as the 0V rail inside the unit.

This type of situation could easily arise, for example, when measuring engine heat or brake disc heat in a car and the unit is being powered by the vehicle's battery. In this situation, the probe point and the internal 0V rail will be at slightly different voltages due to current flowing in the vehicle's chassis. The difference in voltage may only be small but the thermocouple's output only varies by about 40µV/°C, so only small variations can mean a huge error in temperature readings.

The 100Ω resistor eliminates this problem by preventing significant current flow between the thermocouple's negative terminal and the 0V rail within the thermometer.

Deriving the offset

The 1.25V offset for IC1 is derived from REF1, a precision 2.5V voltage reference, via a resistive divider. This divider comprises four 10kΩ resistors and a 100Ω trimpot (VR3).

As shown, the 1.25V midpoint of the 10kΩ fixed resistive divider is fed to pin 5 of IC2b, while the voltage on VR3's wiper is fed to IC2c. VR3 allows the offset voltage to be varied over a small range either side of 1.25V.

IC2b and IC2c are both connected as unity gain buffer stages. When LK1 is installed, IC2b provides a fixed 1.25V offset for IC1 at its REF (pin 2) input. At the same time, IC2c provides the variable offset output to the panel meter at its IN LO input.

Alternatively, if LK2 is installed, IC2c drives both the reference input of IC1 and the INLO input of the LCD panel meter. In this case, the voltage applied to both IC1's REF input and the panel meter's INLO input are exactly the same and this is the linking option to use if you do not want to accurately adjust the temperature calibration.

LCD panel meter

As stated previously, the LCD panel meter measures the difference between its INHI (pin 7) and INLO (pin 6) inputs. In this circuit, IC1 drives the INHI input via one of two 50:1 voltage dividers (one fixed, the other variable) when S2 is in position 1. IC1 is capable of delivering in excess of ±5mA to a load but the fixed 50:1 divider draws just 115µA maximum when IC1's output is producing 7.25V for a 1200°C measurement. This low current minimises any internal heating of the IC.

The fixed divider is selected using link LK4. It's made up using a 51kΩ resistor in the top section and 39Ω, 1.8Ω and 1kΩ resistors at the bottom. Assuming the values are exact, the division ratio is very close to 50:1. However, resistor tolerances can shift this to within a range of around 50.05:1 to 49.95:1.

The variable divider shares the 51kΩ and 1kΩ resistors but uses a 100Ω trimpot in place of the 39Ω and 1.8Ω resistors in the fixed divider. This allows the divider to be adjusted. It's selected by installing link LK3 instead of LK4.

The LCD panel meter itself is based on an Intersil ICL7106 3.5-digit LCD analog-to-digital converter (ADC). Its INLO, COM (common) and RFL (reference low) pins are all connected together, ie, they are all fed with the reference offset voltage at IC2c's output. In addition, the ROH output is connected to the RFH (reference high) input and this sets the panel meter to 200mV full scale.

A 5V supply rail for the LCD is derived from regulator REG1 (7805).

The OP747ARZ Quad Precision Op Amp

The OP747ARZ quad precision op amp specified here has features that are not found in general-purpose op amps.

First, it features a low offset voltage of 100µV maximum and the input bias and offset currents are in the very low nA range. Second, it can handle input voltages ranging from the ground supply rail up to within 1V of the positive supply. And third, the output can reach close to each supply rail.

Taken together, these characteristics make the op amps ideal for this circuit.

REG1's input and output rails are both filtered using 100µF electrolytic capacitors, while LED1 in series with a 470Ω current-limiting resistor provides power indication.

This regulated 5V supply also drives the 2.5V reference (REF1), this time via a 4.7kΩ resistor. As well as providing a source for the offset voltage, the resulting 2.5V rail is also fed to the top of VR1 which sets the thermostat preset.

VR1 is connected in series with a 15kΩ resistor across this supply and its wiper provides an output which ranges from 326mV up to 2.5V. IC2d amplifies this by three, as set by the 20kΩ and 10kΩ resistors in the feedback path. The resulting voltage at the output of IC2d can range anywhere from 978mV up to 7.5V and that more than covers the possible voltage range from IC1, for temperatures ranging from -50°C to 1200°C.

As described previously, op amp IC2a is wired as a comparator. It monitors IC2d's output and compares this with IC1's output. IC2a thus switches its output high when the measured temperature is above the preset temperature or low when the measured temperature goes below the preset (ignoring hysteresis).

Trimpot VR2 (1MΩ) and the 100kΩ and 470Ω resistors provide hysteresis. With VR2 set at 1MΩ, the hysteresis is at its minimum and there is less than 1°C hysteresis. At the other extreme, with VR2 set for 0Ω, the hysteresis is more than 9°C.

Relay driver circuit

IC2a drives transistor Q1, which in turn drives Q2, when link LK5 is inserted. Alternatively, if LK6 is selected, Q1 is bypassed and IC2a drives Q2 direct.

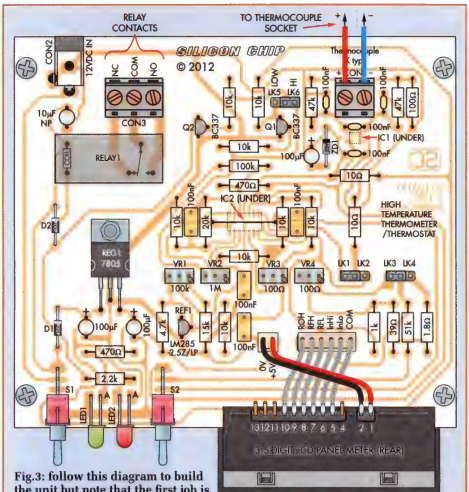

Fig.3: follow this diagram to build the unit but note that the first job is to install surface-mount devices IC1 & IC2 on the underside of the PCB (see below). You can omit the relay, CON3, S2 and transistors Q1 & Q2 if you intend using the unit as a thermometer only and don't need the thermostat function.

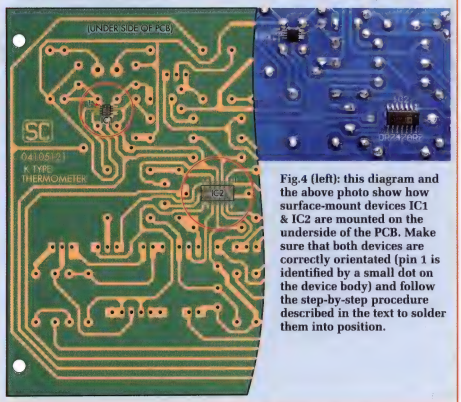

Fig.4 (left): this diagram and the above photo show how surface-mount devices IC1 & IC2 are mounted on the underside of the PCB. Make sure that both devices are correctly orientated (pin 1 is identified by a small dot on the device body) and follow the step-by-step procedure described in the text to solder them into position.

These two links select whether the relay turns on for a low-to-high temperature transition (LK6 in place) or a high-to-low transition (LK5 in place). When LK6 is in circuit, Q2 turns on when IC2a's output goes high (ie, when the temperature rises above the preset) and this turns on relay 1. The relay subsequently turns off again when IC2a's output switches low (ie, when the temperature falls below the preset).

Conversely, when LK5 is in circuit, Q1 inverts the logic. In this case, Q2 and the relay are normally on since Q2's base is pulled high. However, when IC2a's output switches high (as the temperature rises above the preset), Q1 turns on and pulls Q2's base to ground. As a result, Q2 and the relay turn off and remain off until the temperature falls below the preset again.

LED2 lights whenever the relay switches on to indicate that the set temperature threshold has been reached. The associated 2.2kΩ resistor limits the current through LED2, while diode D2 protects Q2 from damage by quenching the back-EMF voltage spikes generated when the relay turns off.

The relay provides both the usual common (COM), normally open (NO) and normally closed (NC) contacts, so it can also drive a load on or off depending on the selection of the NO or NC contacts. So it may seem that links LK5 and LK6 are not really necessary to reverse the switching sense.

However, there are reasons why you may wish to select whether the relay is normally powered or not, especially when the relay contacts are required to switch a heating or cooling operation.

One reason is that less current is drawn by the circuit when the relay is off and you might want to choose the link and contact configuration that draws the least power.

Another reason is that you might want to ensure fail-safe operation if power is cut to the circuit. By using the COM & NO contacts to do the switching, you can ensure that power is not provided for heating or cooling if the power to the Thermometer/Thermostat fails.

Construction

The assembly is straightforward with all parts except the probe socket and the LCD panel meter mounted on a PCB coded 21105121 (117 x 102mm). This is housed in a plastic instrument

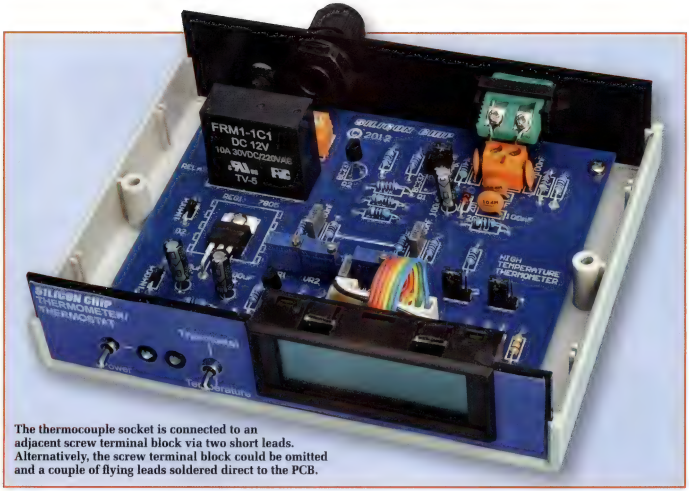

The thermocouple socket is connected to an adjacent screw terminal block via two short leads. Alternatively, the screw terminal block could be omitted and a couple of flying leads soldered direct to the PCB.

case measuring 140 x 110 x 35mm.

Begin by carefully checking the PCB for any defects. Check also that the hole sizes are correct for each component to fit neatly. The corner mounting holes and the regulator mounting hole should all be 3mm in diameter.

Our prototype used a double-sided PCB and Fig.3 shows the parts layout. The first step is to install IC1 and IC2. These are both surface-mount devices (SMDs) and mount on the underside of the PCB – see Fig.4.

To install these, you will need a fine-tipped soldering iron, some fine solder and some quality solder wick. A magnifying lamp or at least a magnifying lens will also be handy.

It's best to install IC2 first. This is the 14-pin device with the wider pin spacings. First, place the PCB copper side up and apply a small amount of solder to the top-right pad, then pick the IC up with tweezers and position it near the pads. Check that it is orientated correctly (ie, with its pin 1 dot positioned as shown on Fig.4), then heat the tinned pad, slide the IC into place and remove the heat.

Now check the IC's alignment carefully using a magnifying glass. It should be straight, with all the pins centred on their respective pads and a equal amount of exposed pad on either side. If not, reheat the soldered pin and nudge the chip in the right direction.

Once its position is correct, solder the diagonally opposite pin, then recheck its position before soldering the remaining pins. Don't worry too much about solder bridges between pins at this stage; they are virtually inevitable and can easily be fixed. The most important job right now is to ensure that solder flows onto all the pins and pads.

Once you've finished, apply a thin smear of no-clean flux paste along all the solder joints and remove the excess solder using solder wick. You should then make a final inspection to ensure that there are no remaining solder bridges and that the solder has not "balled out" onto a pin without flowing onto the pad.

If there are still bridges, clean them up with more flux and solder wick.

Once IC2 is in place, you can install IC1 in exactly the same manner.

Through-hole parts

The larger through-hole parts can now be installed on the top of the PCB. Start with the resistors and diodes, then install zener diode ZD1, the MKT and ceramic capacitors and the electrolytics. It's a good idea to check the value of each resistor using a multimeter before installing it.

Take care with the polarity of the electrolytics, the diodes and the zener diode. They must be orientated as shown on Fig.3.

Transistors Q1 & Q2 and the LM385-2.5 precision voltage reference (REF1) can go in next. REG1 can then be installed. This mounts horizontally with its tab against the PCB, so you will have to bend its leads down at right angles to match its mounting holes.

Secure its tab to the PCB using an M3 x 6mm screw and nut before soldering its leads. Don't solder the leads before securing the tab; you could crack the copper tracks at the mounting screw is tightened if you do.

Trimpots VR1-VR4 are next on the list. These must all be mounted with the adjustment screw to the right. Follow with the three 3-way pin headers for links LK1-LK6, then install the 6-way and 2-way polarised headers for the LCD panel meter connections.

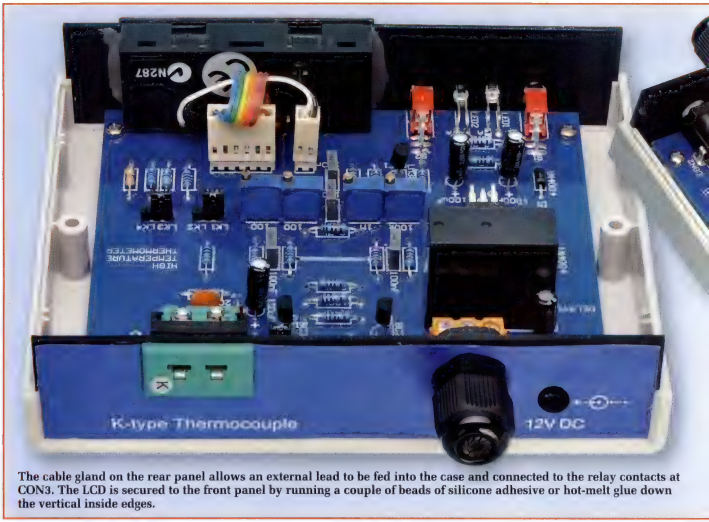

The cable gland on the rear panel allows an external lead to be fed into the case and connected to the relay contacts at CON3. The LCD is secured to the front panel by running a couple of beads of silicone adhesive or hot-melt glue down the vertical inside edges.

Be sure to orientate these headers as shown, ie, with their vertical tabs towards the panel meter.

Once they're in, you can install the two LEDs but first you have to bend their leads down through 90° some 9mm from their bodies.

The best way to do this is to first cut a cardboard spacer 9mm wide. This is then be used as a template when bending the LED leads. Make sure that each LED is correctly orientated before bending its leads – the (longer) anode lead must be on the right when looking at the lens.

Having bent their leads through 90°, the two LEDs must be installed with their leads 5mm above the PCB. This is best done by pushing them down onto a 5mm spacer, then soldering the leads to the PCB pads.

Switches S1 & S2 are right-angle types and are mounted directly on the PCB. Push them down onto the board as far as they will go before soldering their leads. The PCB assembly can then be completed by installing the relay, the DC socket (CON2) and the 2-way and 3-way screw terminals.

Connecting the panel meter

The panel meter is wired to the 6-way header plug and to the 2-way header plug using short lengths of ribbon cable. These leads can be obtained by separating an 8-way ribbon into 6-way and 2-way strips.

Cut these strips to 50mm in length, then strip about 2mm of insulation from the individual wires at one end and crimp them to the header pins. The pins can are then inserted into the headers.

The other ends of these leads can then be stripped and soldered to the LCD panel meter pins. Check carefully to ensure that each wire goes to the correct pin on the panel meter and that there are no shorts between them. In fact, it's a good idea to slip a short length of heatshrink over each wire before soldering it and then pushing over the soldered joint to insulate it from its neighbours.

Jumper links LK2 & LK4 should now be installed and either LK5 or LK6. Install LK5 if you want the relay to switch on when the temperature drops below the preset. Alternatively, install LK6 if the relay is to switch on when the temperature rises above the preset.

Final assembly

Fig.5 shows the front and rear panel artworks. You can purchase finished panels from SILICON CHIP or you can download the artworks in PDF format from our website.

Mounting the panel meter

The LCD panel meter is mounted by sliding into its front-panel slot (which is open at the top). Check that the top of the meter sits flush with the top of the panel. If it protrudes slightly, it will be necessary to make the slot slightly deeper until it does sit flush.

The meter is secured in place by running a bead of silicone sealant or hot-melt glue along the two vertical inside edges, adjacent to the front panel.

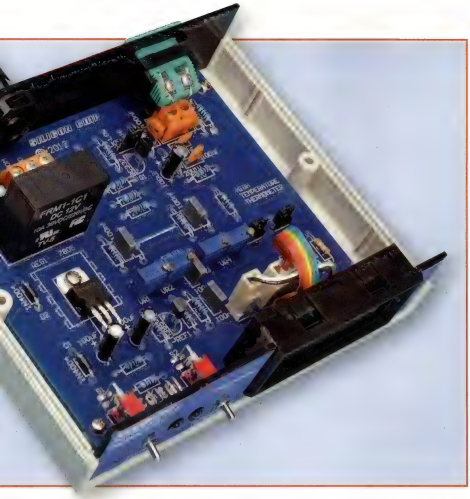

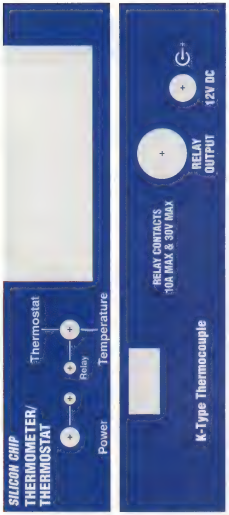

Fig.5: these front and rear panel artworks can be copied and used as drilling templates. Finished panels are also available from SILICON CHIP.

Once the meter is in place, the front panel and the PCB assembly can be slid into the case. The PCB is then secured to the base using four self-tapping screws that go into integral mounting bushes. That done, the leads from the panel meter can be plugged into the headers on the PCB.

The rear panel carries a cable gland (for the relay outputs) and the thermocouple socket. The latter is fed through its mounting slot from the rear (terminal screws facing up) and fitted with the supplied clip to hold it in place.

Once that's done, the rear panel can be slipped into the case and two short wires run between the thermocouple socket and the screw terminal block on the PCB.

The lid can now be test fitted to make sure everything is correct. Note that it will be necessary to file the two ridges at the front of the lid down where they meet the panel meter.

Testing

To test the unit, first apply power

Table 1: Resistor Colour Codes

❑	No.	Value	4-Band Code (1%)	5-Band Code (1%)
❑	1	100kΩ	brown black yellow brown	brown black black orange brown
❑	1	51kΩ	green brown orange brown	green brown black red brown
❑	2	47kΩ	yellow violet orange brown	yellow violet black red brown
❑	1	20kΩ	red black orange brown	red black black red brown
❑	1	15kΩ	brown green orange brown	brown green black red brown
❑	8	10kΩ	brown black orange brown	brown black black red brown
❑	1	4.7kΩ	yellow violet red brown	yellow violet black brown brown
❑	1	2.2kΩ	red red red brown	red red black brown brown
❑	1	1kΩ	brown black red brown	brown black black brown brown
❑	2	470Ω	yellow violet brown brown	yellow violet black black brown
❑	1	100Ω	brown black brown brown	brown black black black brown
❑	1	39Ω	orange white black brown	orange white black gold brown
❑	2	10Ω	brown black black brown	brown black black gold brown
❑	1	1.8Ω (5%)	brown grey gold gold	not applicable

Parts List

1 PCB, code 21105121, 117 x 102mm
1 plastic instrument case, 140 x 110 x 35mm
1 12V DC 500mA plugpack
1 3.5-digit LCD panel meter (Jaycar QP-5570 or similar)
1 front-panel label or 1 front-panel PCB, code 21105122
1 rear-panel label or 1 rear-panel PCB, code 21105123
1 K-type thermocouple probe (Jaycar QM-1292 -50°C to 250°C, QM-1283 -40°C to 1200°C)
1 K-type thermocouple probe socket (Element14 Cat. 708-6386)
1 SPDT 10A 12V relay, Jaycar SY-4050 or equivalent (RELAY1)
2 SPDT PCB-mount toggle switches (S1,S2) (Altronics S1421 or equivalent)
1 PCB-mount 2.5mm DC socket (CON1)
1 2-way PCB-mount screw terminal block, 5.08mm spacing (CON2)
1 3-way PCB-mount screw terminal block, 5.08mm spacing (CON3)
1 cable gland for 3-6.5mm diameter cable
1 2-way polarised pin header, 2.54mm spacing
1 6-way polarised pin header, 2.54mm spacing
1 2-way header sockets to match above header
1 6-way header sockets to match above header
2 3mm LED bezels (optional)
3 3-way pin headers, 2.54mm spacing (LK1-LK6)
3 jumper shunts
4 No.4 x 6mm self-tapping screws
1 M3 x 6mm pan-head machine screw
1 M3 nut
1 100mm length of 0.8mm tinned copper wire
1 50mm length of 8-way ribbon cable

Semiconductors

1 AD8495ARMZ precision thermocouple amplifier with cold junction compensation (IC1) (Element14 Cat. 186-4707)
1 OP747ARZ quad precision single supply op amp (IC2) (Element14 Cat. 960-4405) (IC2)
1 LM285Z/LP-2.5 micropower voltage reference diode (REF1) (Element14 Cat. 966-5447; Jaycar ZV1626)
1 7805 5V 3-terminal regulator (REG1)
2 BC337 NPN transistors (Q1,Q2)
1 22V 1W zener diode (ZD1)
2 1N4004 1A diodes (D1,D2)
1 green 3mm LED (LED1)
1 red 3mm LED (LED2)

Capacitors

3 100µF 16V PC electrolytic
1 10µF 50V non-polarised electrolytic
4 100nF ceramic
4 100nF MKT polyester

Trimpots

1 1MΩ top-adjust multi-turn trimpot (code 105) (VR2)
1 100kΩ top-adjust multi-turn trimpot (code 104) (VR1)
2 100Ω top-adjust multi-turn trimpots (code 100) (VR3,VR4)

Resistors (0.25W, 1%)

1 100kΩ	1 2.2kΩ
1 51kΩ	1 1kΩ
2 47kΩ	2 470Ω
1 20kΩ	1 100Ω
1 15kΩ	1 39Ω
8 10kΩ	2 10Ω
1 4.7kΩ	1 1.8Ω 5%

Note: PCBs for this project are available from SILICON CHIP.

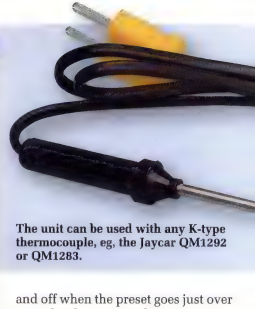

The unit can be used with any K-type thermocouple, eg, the Jaycar QM1292 or QM1283.

and check that the power LED lights. The display should also show a temperature reading with S2 (Thermostat/Thermometer) in position 1 (Temperature).

If it does, check the power supply voltages on the board. REG1's output should be close to +5V, while pin 7 of IC1 should be about 11.4V as should pin 4 of IC2. REF1 should have close to 2.5V across terminals 1 and 2.

Now check that the display shows a temperature that's close to the ambient when the connected probe is exposed to room air. Assuming it does, switch S2 to position 2 (Thermostat) and check that you can adjust the preset using VR1. The relay should click on and off when the preset goes just over or under the measured temperature.

VR2 can now be adjusted to give the required amount of hysteresis (clockwise for more hysteresis and anticlockwise for less).

Calibration

If you wish, the unit can be left uncalibrated in which case its accuracy will be as shown in the specifications panel.

Alternatively, if you wish to calibrate the unit for improved accuracy, the procedure is as follows:

(1) Remove jumper links LK2 & LK4 and install links LK1 & LK3 instead.
(2) Place the thermocouple probe in a cup of distilled water brimming with ice (note: the ice also needs to be made from distilled water to ensure accuracy and the ice-water mixture has to be constantly stirred to maintain a 0°C temperature).
(3) Adjust VR3 so that the thermometer reads 0°C.
(4) Place the thermocouple probe in boiling distilled water and adjust VR4 for a reading of 100°C at sea level or deduct 1°C for every 300m above sea level.

That completes the calibration. The lid can now be attached to the case and the unit is ready for use.

Ambient temperature display

There are a couple options available if you just want the unit to measure the ambient temperature.

First, you can use the thermocouple as the sensor and simply sit it in free air. Alternatively, you can disconnect the thermocouple and short its inputs on the PCB using a short length of wire. The unit will then display the ambient

temperature (in °C) as measured by the AD8495 itself.

Note that this will really be the temperature inside the case rather than the room temperature. However, this will be close to room temperature, since there is little warming inside the case.

If you intend using this project simply as an ambient temperature thermometer or to measure temperatures up to 199°C only, then the divider resistors can be changed so that they divide by five instead of 50. That way, the display can show the temperature with a 0.1°C resolution.

To do this, change the 1kΩ resistor to 12kΩ, the 39Ω resistor to 750Ω and the 1.8Ω resistor to a 0Ω resistor (or wire link). The 100Ω trimpot (VR4) on the adjustable side of the divider should be changed to 1kΩ.

Finally, the decimal point in front of the righthand digit can be displayed by connecting the LCD panel meter's DP3 pin to the +5V supply. The details are shown on the instruction sheet supplied with the meter. SC

Controlling Mains Voltages

As presented in the diagram and photos, the Digital Thermometer/Thermostat is capable of controlling external loads running at 30V DC and up to 10A. However, it can control 230VAC loads, provided the relay and the wiring itself is rated for 250VAC mains operation. **This will mean that a larger case must be used to accommodate the extra wiring and mains input and output sockets** (note: the plastic case used here is *not* suitable; it's too small and the back is too flimsy to safely anchor mains cables).

The mains input wiring will need to include a mains fuse and we suggest an IEC chassis-mount male socket that includes a switch and fuse (eg, Jaycar PP-4003). For the output mains wiring, use a chassis or panel-mount female IEC socket (eg, Jaycar PS-4176) or 3-pin mains panel-mount socket (eg, Jaycar PS-4094).

All mains wiring should be run in 250VAC 10A-rated cabling. Cable tie and clamp the internal mains wires so they cannot possibly come adrift and contact any low-voltage section of the circuit. It's a good idea to secure the terminal block wires to the PCB; eg, by using silicone sealant or a cable tie that loops through a couple of holes drilled through the PCB adjacent to the terminal block.

A metal enclosure will need to be securely earthed. For a plastic case, any exposed metal screws used to secure the IEC connector or other parts near to the mains wiring will also need to be earthed. Nylon screws can be used as an alternative to earthing the screws.

The relay should be an Altronics S-4197 or exact equivalent, with contacts rated for 250VAC operation. Finally, for the 3-way terminal block, CON3, we recommend using a Weidmuller type (Jaycar HM-3132) so that it has sufficient voltage rating.

Mssed an issue?

SILICON CHIP has available all back issues going back to 2003 and many issues before then. (And if we can't supply a back issue, we can always supply a reprint of any particular article. Project reprints also include relevant notes and errata). And it's not just for SILICON CHIP – we can also supply reprints of articles from Electronics Australia/RTV&H and ETI!

The price for either a back issue or a project reprint is the same: $12.00 including P&P within Australia; $15.00 inc P&P overseas.

Keep your SILICON CHIP collection intact – order your back issues today before they run out!

But there's an even better way of ensuring you don't miss an issue... subscribe!

A SILICON CHIP subscription positively guarantees that you will not only receive EVERY issue, but there are several other advantages – for example, you get 12 issues for less than the price of 11. Count the advantages of a SILICON CHIP subscription:

1. It's cheaper – you $ave money!
2. It's delivered right to your mail box!!
3. You can always be sure you'll receive it!!!
4. We pick up all the postage and handling charges!!!!
5. You will never miss an issue because it's sold out (or you forgot)!!!!!
6. You choose the length of subscription required: 6, 12 or 24 months.
7. You can even choose to auto-renew your subscription at the end of the period!

PRICE OF 12 ISSUES OVER-THE-COUNTER IN AUSTRALIA:

~~$132.00~~ $111.60

Here's the deal:

6 months *SILICON CHIP*: $52.00 in Australia; $AU55.00 in NZ*; $AU80.00 o'seas*

12 Months *SILICON CHIP*: $97.50 in Australia; $AU99.00 in NZ*; $AU140.00 o'seas*

24 Months *SILICON CHIP*: $188.00 in Australia; $AU196.00 in NZ*; $AU265.00 o'seas*

* VIA AIR MAIL

There's a handy order form on P105

Jaycar Electronics

Better, More Technical

MEGA MAY SALE

MAY EDITION

Price Valid Until 29/05/2012

EtherMega, Mega Sized Arduino Compatible Board with Ethernet

The ultimate network-connected Arduino-compatible board: combining an ATmega2560 MCU, onboard Ethernet, a USB-serial converter, a microSD card slot for storing gigabytes of web server content or data, Power-over-Ethernet support, and even an onboard switchmode voltage regulator so it can run on up to 28VDC without overheating.

- ATmega2560MCU running at 16MHz
- 10/100base-T Ethernet built-in
- 54 digital I/O lines
- 16 analog inputs
- Prototyping area
- Size: 105(W) x 54(H) x 19(D)mm

XC-4256

More Arduino Boards, Shields & Modules on page 8

$119.00

WANT A FREE COPY OF OUR 2012 CATALOGUE?

Place an order of $30 or more via our Techstore website and type "FREE CATALOGUE" in the comment box as you check-out.

Offer valid until 31/5/2012.

High Power Wireless Outdoor Router/Range Extender 802.11n

Has a wireless power of 600mW and excellent point to point range with the installed internal directional antenna. If omni directional transmission is required then you can connect an external antenna (sold separately) via the SMA connector at the base.

- LAN port 10/100 (featuring PoE)
- PoE power injection adapter included
- 12VDC 1A Power supply included
- High data rate - up to 150Mbps
- Size: 225(H) x 77(W) x 59(D)mm

YN-8330

NEW $169.00

10-Way Headphone Listening Centre with Microphone

Distributes audio signal across up to 10 headphones and has a built-in amplifier which prevents loss of sound quality. Each channel has its own volume control. Supplied with a mains power adaptor, 1 x dynamic microphone and 1 x 2 metre 3.5mm plug to 6.5mm plug stereo lead.

- Output power: 220mW (32ohm)
- Headphone Impedance: 16-64ohm
- Size: 191(W) x 95(H) x 45(D)mm

AA-0403

NEW $149.00

8" Colour LCD Doorphone System with 4Ch Recording

The next generation in video doorphone entry systems. The 8-inch high resolution screen connects up to two intercom/cameras and you can optionally connect up to 4 additional security cameras (QC-3639 available separately) to the screen, giving you four-channel security. The monitor can then display a multi-way split screen view, or auto-switch between channels.

- Quad split screen or full screen display
- Total of 6 video inputs
- Hard drive capacity: 2.5"/ 500GB Hard drive
- Remote access over Ethernet or Internet
- Mains power supply included
- Monitor size: 210(H) x 250(W) x 35(D)mm

QC-3628

Due Early May

Additional Intercom Camera to suit QC-3629 $79.00

NEW $549.00

Cassette Tape to MP3 Encoder with USB

MEGA SALE!

Install the included software, plug in the encoder and you're ready to convert music from your cassettes to digital MP3 or WAV format! Doubles as a handy dictaphone and tape player with built-in speaker.

- Windows compatible
- Power via 3VDC adaptor or 2 x AA batteries (not included)
- Size: 90(L) x 116(W) x 36(D)mm

GE-4053

Was $89.95

$49.95 SAVE $40

Limited Stock. Not available online.

5W VHF Marine Radio Transceiver

Powerful 5W hand-held transceiver gives you coverage of all International VHF marine channels. The antenna is detachable so units can be connected to a larger antenna mounted on a boat. Includes Li-ion rechargeable battery pack, AC adaptor, charging cradle and belt clip.

- 1W/5W switchable output power
- LCD backlit display
- Dual and triple watch function
- Channel scan function
- Auto power saver mode

DC-1096 *Was $199.00*

$119.00 SAVE $80

1MHz Handheld Function Generator

A signal generator with the features of a bench top generator and a portable size! This pocket signal generator will produce sine, square, and triangle waveform signals yet it is only a little bigger than a Smartphone. Output frequency adjustment is from 1Hz to 1MHz with maximum amplitude of 8Vpp. It also has a function to shift between two frequencies over an adjustable period. With a backlit LCD, inbuilt rechargeable battery, and durable rubber surround it is an ideal instrument for testing on the go or in your workshop. See website for specifications.

- Weight: 200g
- Size: 114(H) x 74(W) x 29(D)mm

QT-2304

NEW $199.00

Digital DC Power Meters

Displays both continuous and peak voltage, current, and power. Cumulative amp hours and watt hours consumed are also stored allowing you to monitor the system over time. Suitable for DC operation from 5 to 60V.

An ideal addition to low voltage DC circuits on boats, caravans, or solar systems.

- Size: 41(L) x 45(W) x 23(D)mm

DC Power Meter with Internal Shunt

MS-6170 $69.95

DC Power Meter to suit 50mV External Shunt

MS-6172 $74.95

Suitable DC shunts sold separately

Due Early May

From $69.95

MEGA MOTHER'S DAY – 13th May

1kg Digital Bench Scale

Precision 1kg electronic scale with resolution of 0.01g for when a high degree of accuracy is required. Weighs in grams, ounces, pounds, grains, carats and troy ounces.

- Auto power-off after 60 seconds
- Automatic calibration
- Backlit LCD
- Tare and counting function
- Mains powered
- Size: 175(W) x 75(H) x 260(D)mm

QM-7264

$149.00

Waterproof Bathroom Clocks

Truly convenient and waterproof analogue clocks. The suction cup allows you to mount it on to any smooth surface like a tiled wall or mirror. Available in blue and pink.

- Requires 1 x AA battery
- Approx. 130(Dia.)mm

Blue AR-1757 ***$9.95***
Pink AR-1758 ***$9.95***

$9.95 Each

Sports Stopwatch

This water resistant handy sports timer will be a useful addition to mums sports bag.

- Split time, alarm and calendar function
- Includes 600mm lanyard
- Size: 55(W) x 65(H) x 15(D)mm

XC-0270

$12.95

For the sporty mum!

Wireless "Object Locator"

Locate misplaced objects such as keys, TV remote, glasses, wallet etc. Simply tag your keys and press the master transmitter (colour coded) and the lost item beeps back. Supplied with 1 x keyfob transmitter and 3 x separate receivers.

- Range 7-10 metres
- Transmitter size: 60(L) x 32(W) x 7(D)mm

XC-0354

$29.95

Mum's Kitchen Helpers

Countdown Timer

Use it for cooking, parking, exercising, studying or even timing the kids on the computer. It's water resistant, has a memory setting for frequently used values and the buzzer alerts you to when your time is up.

- Countdown range 99 hours 99 minutes 99 seconds
- Batteries included
- Size: 88(W) x 130(H) x 22(D)mm

XC-0271

$24.95

Digital Luggage Scale

Pack one of these on your next trip and avoid nasty surprises at the check-in counter.

- Requires 2 x AAA batteries
- Capacity: 40kg
- Backlit LCD
- Overload and low battery indication
- Size: 122(L) x 85(H) x 25(W)mm

QM-7232

$19.95

Mega Desktop Bling For Mum

Add a bit of bling to mum's desk with these glittering pink and white rhinestone-finished accessories.

Don't forget Mother's Day 13th May!

Rhinestone Calculator

It has an 8 digit LCD and all the features of a regular office calculator. Can be battery operated or solar powered.

- Battery included
- Size: 145(L) x 100(W)mm

GH-1892 ***Was $19.95***

$7.95 SAVE $12

Non-Contact Digital Thermometer

Featuring an easy to read LCD. Handy for use in the kitchen or the food service industry to ensure proper cooking, grilling and storage temperatures.

- Pocket sized with LCD
- Fast response time
- Temp range: -35 - 230°C / -31 446°F
- Battery included
- Size: 74(L) x 40(W) x 20(D)mm

QM-7225

$34.95

Rare Earth Fridge Magnets

Small in size but won't cover up your pictures, notes or shopping lists. These nifty fridge magnets are strong enough to hold up to 10 sheets of paper.

- Pack of 5
- Size: 20(H) x 11(Dia.)mm

LM-1629

$9.95

Rhinestone Stapler

This stapler takes size 56 staples and will finish off any desk with style.

- Size: 160(L) x 39(W)mm

GH-1894

Was $19.95

$9.95 SAVE $10

Upright Gas Torch

Very versatile and ideal for brazing, silver soldering, jewellery work, plumbing or general hobby use.

- Hot 1300°C adjustable flame
- Size: 150(H), base 69 x 69mm

TS-1660

Butane gas refill: NA-1020 $5.95

$39.95

Mini 3 Channel RC Helicopter

Robust construction to take the inevitable bump and occasional crash. 20 minute charge directly from the remote unit gives about 10 minutes flying time.

- Remote requires 6 x AA batteries
- Recommended for ages 8+
- Size: 160mm long approx.

GT-3306

Was $29.95

$24.95 SAVE $5

Limited in stock. Not available online.

Rhinestone Hub

This USB 4 port hub is sure to add some style and class to mums boring old desk. Simply plugs into the computer's USB ports.

- 90mm lead
- USB 2.0 compliant

GH-1898

Was $29.95

$14.95 SAVE $15

Note: Products above are limited in stock and not available online. Please ring your local store to check stock.

Ultrasonic Cleaner

MEGA SALE!

Massive 100W transducer produces millions of microscopic bubbles that penetrate and clean the most microscopic of crevices, cleaning them thoroughly. Used for automotive injectors, jewellery, glasses, circuit boards and more!

- Large LED display
- Mains powered
- Tank capacity: 3L
- Size: 265(L) x 160(W) x 245(H)mm

YH-5410 ***Was $399.00***

$299.00 SAVE $100

Water Misting Fan

Powerful enough to provide a significant breeze but safe enough for the kids to use with soft blades.

- Requires 2 x AA batteries

GH-1071

$8.95

Deluxe Automatic Soap Dispenser

Automatically dispenses a measured amount of liquid soap when you put your hands under it. No more touching soap bottles which reduces the risk of transferring germs.

- LCD with auto cleaning mode
- Requires 3 x AA batteries
- Size: 195(H) x 85(W) x 160(D)mm

GH-1188

$29.95

To order call 1800 022 888

All savings based on Original RRP. Limited stock on sale items. Prices valid until 23/05/2012.

Turntable with Built-in Pre-amp & PC Encoding

Converts old vinyl to modern digital WAV, MP3 or OGG format using a PC. It has a high quality magnetic cartridge which ensures clear and distortion free conversion. With a built in pre-amp, it has a line level RCA output for component or amplifier integration.

$99.00

- Mains powered
- Size: 372(W) x 352(D) x 104(H)mm

GE-4134

USB Dynamic Microphone

Plug and play with any recording software or the recording interface on your PC for superior sound quality on your next podcast or home recording masterwork.

- Easy connectivity
- High sound quality
- Type: USB unidirectional dynamic
- Termination: 3m cable, USB 2.0 plug

AM-4103 ***Was $39.95***

$29.95

SAVE $10

Microphone Intercom Speaker

Designed for box office style communication through protective glass such as ticket booths, bank counters, reception desks, or nightclub entry points. It features an adjustable gooseneck and volume adjustable rotary button at the base.

NEW

$99.00

- Requires 2 x AA batteries
- Uni-directional electret condenser
- LED indicator (power, on-off, low battery)
- Size: 98(H) x 66(W) x 25(D)mm

AA-4089

Active VGA + Audio to HDMI Converter

This converter box takes the VGA output + stereo audio signal from your PC, and converts them to HDMI format whilst maintaining full high-definition resolution. Mains adaptor included.

- Size: 90(L) x 68(W) x 25(H)mm

AC-1609 ***Was $99.00***

$89.00

SAVE $10

Earphones Adaptor with Mic

Simply connect this adaptor to both your iPhone® and headphones and listen away. With its built-in mic, you can answer a call without even having to take your headphones off! Simply click to answer or to play/pause the music.

- Music playback
- 3.5mm headphone jack

AA-2098

NEW

$12.95

2.4GHz Omni Antenna 12dB

Suitable for boosting signal strength and range in WLAN applications. The fibreglass construction provides excellent weather proofing properties making it ideal for outside mounting.

- Power handling: 20W
- Size: 960(H)mm x 20(Dia.)mm

AR-3284

NEW

$99.00

Suitable 5m lead (N plug to SMA plug) available separately NEW WC-7822 $34.95

Kitchen Voice Recorder

Use it for shopping lists, as a reminder for the kids or even to record the ingredients in those quick cooking commercials. Strong magnetised backing.

Don't forget mothers day!

- 3 folders up to 50 messages
- Digital clock
- Requires 2 x AA batteries
- Size: 130(L) x 66(H) x 17(W)mm

XC-0249 ***Was $69.95***

$34.95

SAVE $35

Socket Wallplate - TV & FM

Standard power point size. Has two PAL sockets, one for TV and one for FM. Simply run one cable in from antenna.

- F59 rear connection
- Size: 71(W) x 115(H)mm

LT-3066

Also available:

Flushmount 75 Ohm TV Wall Socket with F59 Connection

LT-3065 $6.50

NEW

$9.95

2-Way Ceiling Mount Indoor Speakers

Combining a coaxial woofer and dome tweeter these 2 way ceiling speakers give excellent audio quality. Both models feature custom designed crossovers and high performance tweeters matched to the woofers, providing much better sound reproduction over the full music range.

- 8-ohm impedance
- 25mm dome tweeter
- White in colour

6.5" Polycone Woofer

- Resonant Frequency: 70Hz
- Rated Power: 30WRMS

CS-2446 ***Was $99.00***

$79.00

SAVE $20

Sold as a pair

8" Polycone Woofer

- Resonant Frequency: 50Hz
- Rated Power: 50WRMS

CS-2448 ***Was $139.00***

$119.00

SAVE $20

Kingray Masthead Amplifier

Accepts a single "mixed" antenna input, and provides four amplified outputs for you to run to each wall point in your home. All connections are F-type for best signal quality. Housed in a metal case to shield against noise. Includes power supply.

- Wide input range to suit all analogue and digital TV signals
- Suitable for combined VHF/UHF antenna input
- Replacement power supply (**LT-3256** $23.95)
- Size: 105(W) x 90(H) x 35(D)mm

LT-3253

NEW

$79.95

4-Input HDMI Switcher with Digital Audio Splitter

Get high quality picture and sound while keeping your older surround sound system. This switcher will select between 4 HDMI inputs and also separates the digital audio signal from for connection to your older amplifier system.

$79.00

SAVE $20

- 1 x HDMI output with coax and SPDIF audio output
- HDTV 1080p resolution
- Size: 155(W) x 70(D) x 23(H)mm

AC-1625 ***Was $99.00***

Powered CAT5 VGA Baluns with Audio

Transmits VGA and audio signals across a standard CAT5 cable for distances up to 300 metres. Suitable for home or commercial applications where a standard VGA cable can't reach or to run VGA signals through existing wiring in a wall or ceiling. Supplied as a sender and receiver pair with plugpacks included.

$119.00

- Supported resolutions from 640x480 to 1920x1200
- Sender Size: 100(L) x 65(W) x 26(H)mm
- Receiver Size: 81(L) x 43(W) x 23(H)mm

AC-1671

Stereo 2.4GHz Digital Wireless Amplifier System

Send crystal clear audio from your Hi-Fi or portable music device to speakers up to 20m away without messy wiring. Connect your speakers to the spring terminals and power using the included power supplies or by batteries. Supplied with 2 x 150mm 3.5mm curly cables to connect your audio source.

$129.00

- Class T amplifier design
- Power output: 15WRMS x 2 (into 4 ohms)
- Transmitter and receiver requires 8 x AA batteries each
- Size (transmitter and receiver): 156(L) x 45(H) x 95(W)mm

AR-1895

Jaycar Electronics — MEGA AUTO ACCESSORIES

Excite, Move, Technology

Portable Car Safe

Keep your mobile phones, cameras, wallets, keys or GPS's protected with this portable car safe. Simply attached the included 1m alloy cable strap to your seat railing and neatly tuck it under your seat or place in the boot of your car.

- Size: 210(L) x 150(W) x 68(H)mm

HB-5455

Note: iPhone® and notes not included

NEW $24.95

Response Precision Car Amplifiers

With improved heat sinks and upgraded low-profile chassis design, each model delivers outstanding performance package that fits neatly under your car seat. Includes gold plated power and speaker terminals with variable low pass filters. In addition, our class AB amps come with variable high pass filters and pass through RCAs; while our class D subwoofer amps feature variable subsonic filter, phase shift and master/slave operation.

From $119.00

2 x 80WRMS Class AB Amplifier	*AA-0450*	*$119.00*
4 x 50WRMS Class AB Amplifier	*AA-0451*	*$149.00*
2 x 150WRMS Class AB Amplifier	*AA-0452*	*$169.00*
4 x 100WRMS Class AB Amplifier	*AA-0453*	*$229.00*
500WRMS Linkable Class D Subwoofer Amplifier	*AA-0454*	*$179.00*
1000WRMS Linkable Class D Subwoofer Amplifier	*AA-0455*	*$299.00*
4 x 100WRMS Full Range Digital Amplifier	*AA-0457*	*$259.00*

12V HD Digital Set Top Box

Great for use on the road, this high definition set top box will pickup all the digital channels on offer in your locale. You can also plug in a USB drive and record TV in MPEG2 format to watch at a later date.

- Output: HDMI, Composite, RF
- USB port for recording and playback
- Cigarette lighter cable included
- Size: 154(W) x 117(D) x 40(H)mm

XC-4921

NEW $69.95

5-in-1 Jump Starter

Excellent for automotive or camping adventures. Includes heavy duty insulated jumper leads, a 400W inverter, LED work light, 12V power outlets, status gauges, and even a 260 PSI air compressor! Powered from the built-in 18Ah SLA battery and comes with mains and 12V charging cables.

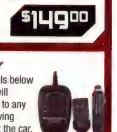

- Size: 295(H) x 270(L) x 215(W)mm

MB-3594

$149.00

Battery Protector

When the vehicle's battery falls below 11.2V, the Battery Protector will automatically suspend power to any connected 12V accessory, saving enough battery power to start the car.

- Plugs directly into the cars cigarette lighter socket
- LED indicator
- 10 amp fuse protection
- 1metre supplied lead

MS-6120 ***Was $23.95***

$19.95 SAVE $4

Coax 2-Way Car Speakers

Ideal replacement for the standard equipment stereo speakers. All are equipped with titanium coated fibre woofers and silk dome tweeters for smooth high frequency response.

4" 15WRMS Speakers
CS-2310 $24.95
5" 17WRMS Speakers
CS-2312 $29.95
6" 22WRMS Speakers
CS-2314 $34.95
6 x 9" 27WRMS Speakers
CS-2316 $44.95

RESPONSE

From $24.95

1 Farad Capacitor

High farad capacitors act as surge current reservoirs for your amplifiers and other electrical equipment. Integrate these capacitors into your audio system to avoid voltage drops from high transient current peaks.

- Gold plated terminals
- Digital voltage display
- Size: 260(H) x 75(Dia)mm

RU-6754 ***Was $99.00***

$79.00 SAVE $20

Sound Dampening Pads

Mainly designed for car audio, but could be used in any speaker application. These pads are installed inside the door skins opposite the back of the speaker drivers. They absorb standing waves and resonances so you get maximum performance.

- Includes glue for installation

$19.95 Each SAVE $20

7" Pad (pair) AK-3665
Was $39.95 Now $19.95 Save $20.00
12" Pad (single) AK-3666
Was $39.95 Now $19.95 Save $20.00

CRAZY CB RADIO CLEARANCE

38 Channel UHF CB Dual Pack with Charge
DC-1005
Was $54.95

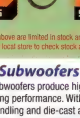

$29.95 SAVE $25

38 Channel UHF CB Radio Mini
DC-1008
Was $19.95

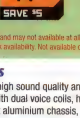

$14.95 SAVE $5

Advanced 2 Watt 38 Channel UHF Transceiver
DC-1047 ***Was $99.95***

$59.95 SAVE $40

3 Watt 38 Channel UHF CB Radio with Scrambler & CTCSS
DC-1060
Was $169.00

$99.00 SAVE $70

CRAZY CLEARANCE PRICE

Note: Products above are limited in stock and may not available at all stores. Please ring your local store to check stock availability. Not available online.

VIFA Subwoofers

These subwoofers produce high sound quality and outstanding performance. With dual voice coils, high power handling and die-cast aluminium chassis, they don't just deliver brilliant low register bass clarity but also thump tremendous SPLs like only VIFA speakers can.

MEGA SALE!

From $149.00 SAVE $100

10" 200WRMS CS-2351
Was $249.00 Now $149.00 Save $100.00
12" 250WRMS CS-2353
Was $299.00 Now $179.00 Save $120.00

Twin Port Subwoofer Enclosures

Dual ported subwoofer enclosures with black carpet covering. Designed for optimal performance with the VIFA 10" and 12" subwoofers. All you need to do is to add the driver of your choice.

10" CS-2526 ***Was $39.95 Now $19.95 Save $20.00***
12" CS-2527 ***Was $49.95 Now $24.95 Save $25.00***

Note: VIFA driver not included

From $19.95 SAVE $20

MEGA SALE!

To order call 1800 022 888

All savings based on Original RRP. Limited stock on sale items. Prices valid until 23/05/2012.

MEGA SECURITY

3MP Mini HD Video Camera

Ultra portable, compact HD video camera and recorder with 2GB of internal memory that will hold up to 50 minutes of video (20 minutes in high definition) or over 3000 photos. Recharges via USB and will gives about 4 hours of use. Pocket clip and desk stand included.

- 350mAh rechargeable battery included
- Supports up to 32GB MicroSD card
- Size: 23(H) x 78(H) x 14(D)mm

QC-8005 ***Was $119.00***

$75.00 SAVE $44

Camera Detector

Detect covert cameras and listening devices with this handy little unit. It uses 6 pulsing LEDs to reveal the location of a camera by illuminating its lens when you look through the lens viewer from up to 10m away. Earphones supplied.

- Built-in wireless RF detector
- Requires 2 x AAA batteries
- Size: 85(H) x 56(W) x 18(D)mm

QC-3506 ***Was $99.00***

$79.00 SAVE $20

Wireless PIR Announcers

Monitor areas wirelessly with these PIR motion detectors. The main control panel is alerted when movement is detected and triggers the announcer. Ideal for retail stores, offices or work shops. Two models available.

NEW From **$59.95**

- Detection range: up to 5m
- Unit size: 122(W) x 143(H) x 52(D)mm PIR size: 75(W) x 120H) x 60(D)mm

LA-5172 shown

Battery Powered ***LA-5172 $59.95***

Battery and Solar Powered ***LA-5174 $79.95***

Due Early May

CRAZY CAMERA CLEARANCE

Product	*Description*	*ORRP*	*SPECIAL*	*SAVE $$$*
QC-3467	*Camera CCD Bullet B&W IP57*	*$99.00*	*$49.00*	*$50.00*
QC-3494	*Camera CCD Colour in Metal Case Mini*	*$99.00*	*$49.00*	*$50.00*
QC-3496	*Camera CCD Colour Pinhole in Metal Case*	*$99.00*	*$49.00*	*$50.00*
QC-3498	*Camera CCD Dome Style Colour*	*$279.00*	*$99.00*	*$180.00*
QC-3310	*Camera CCD Pro Style B&W*	*$109.00*	*$69.00*	*$40.00*
QC-3309	*Camera CCD Pro Style Colour*	*$179.00*	*$59.00*	*$120.00*
QC-3298	*Camera CCD Pro Style Colour ExView HAD*	*$249.00*	*$109.00*	*$140.00*
QC-3299	*Camera CCD Pro Style Colour ExView Hi-Res*	*$349.00*	*$149.00*	*$200.00*
QC-3307	*Camera CCD Pro Style Hi-Res Colour*	*$299.00*	*$129.00*	*$170.00*
QC-3301	*Camera CCD Pro Style Hi-Res Day/Night*	*$299.00*	*$129.00*	*$170.00*
QC-3297	*Camera Dome Vari-Focal 480TVL w/ Bracket*	*$299.00*	*$139.00*	*$160.00*

QC-3467

QC-3310

CRAZY! LOWEST PRICE

QC-3297

Note: Products above are limited in stock and may not available at all stores. Please ring your local store to check stock availability. Not available online.

12V CCTV Power Supplies

Mains power supplies suitable for CCTV installations, with multi-channel outputs for each individual camera. Housed in a rugged lockable steel enclosure designed for permanent professional installations. Must be installed by a licensed Electrician.

MEGA SALE!

4 Channels MP-3850
Was $69.95 Now $39.95 Save $30.00
8 Channels MP-3852
Was $129.00 Now $75.00 Save $54.00

From **$39.95** SAVE $30

4Ch H.264 Network DVR with D1 Resolution

An economical digital video recorder which incorporates a 500GB hard drive, 4 channel multiplexer, Ethernet functions, H.264 video compression, and even delivers D1 (704 x 576) resolution video (playback, live view, & recording) at 100 frames per second. Use it to record up to 4 cameras simultaneously with playback available locally, via a network connection, or using an iPhone® or Smartphone app*.

MEGA SALE!

- Power supply: 19VDC 2.1A (included)
- Size: 343(W) x 240(D) x 68(H)mm

QV-8107 ***Was $399.00***

$299.00 SAVE $100

Note: *Free application available to view live footage. Application based searching and backup requires advanced version at an additional cost.

2-Station Wired Intercom

A simple low cost solution for communicating. Either station can signal the other even when the system is off. It can even be used as a room/baby monitoring system.

- Operates on 9V battery or 240V plugpack
- Supplied with 20m of connecting cable and staples

AM-4310

Note: Domestic use only. Warranty does not apply if product is used industrially.

$24.95

GPS/GSM Tracking Device

The solution to locate and track the whereabouts of your vehicle in real time via the Internet on a computer or Smartphone. The device is easy to install with only 2 - 4 wires to connect. Insert a GSM Sim card (not included) and hide the device away on a metal surface or carpet using the included Velcro adhesive. It works by sending the vehicle's GPS coordinates via the GSM network to the free online tracking service, which shows the location on Google Maps. It can also SMS longitude and latitude coordinates to up to 3 mobile phones. See web for full features and specs.

- Size: 68(L) x 48(W) x 20(D)mm

LA-9011

NEW **$149.00**

7" TFT LCD Colour Monitor

A truly versatile monitor with low power consumption, wide viewing angle and NTSC and PAL compatibility. Use it to watch DVDs, PS2®, XBOX®, etc. Unit comes with an adjustable swivel bracket with double sided tape. Infrared remote control included.

- Power input: 12VDC
- Resolution: 1140(H) x 234(V)

QM-3752

$119.00

2.4GHz Rear View Mirror Reversing Camera

Incorporates a reversing camera that transmits video signals via the 2.4GHz band to the monitor which can be mounted internally or externally. The monitor fits securely over your existing rear view mirror and can be quickly removed when needed.

- 3.5" LCD colour screen
- Range: up to 80m
- Size: 280(L) x 95(H) x 26(D)mm

QM-3795 ***Was $199.00***

$149.00 SAVE $50

8Ch CCTV Power Supply with Battery Backup

To round out any professional CCTV installation, some kind of power backup protection needs to be provided in case any would be thieves decide to cut the power. This handy CCTV power supply solves both the problem of supplying power to a multiple camera installation and providing that power backup.

- Requires backup battery: 12V 7Ah size SLA (use **SB-2486** $29.95)
- Size: 263(L) x 195(W) x 64(D)mm

MP-3855

Was $149.00

$89.00 SAVE $60

MEGA POWER

Laboratory Power Supply

A high powered switchmode power supply with variable voltage output from 1 to 16VDC and variable voltage from 0 to 40A. Features dual action (coarse/fine) microprocessor controlled rotary encoder tuning for smooth, precise and fast settings, 3 user defined voltage and current presets, and intelligent fan cooling control. See website for features and specifications.

- High RFI immunity and excellent EMI
- Overload, short circuit, over temperature and tracking over voltage protected
- *Size: 200(W) x 90(H) x 215(L)mm*

MP-3094

NEW $399.00

Dimmable Constant Current LED Driver

A compact mains powered unit, capable of driving 1-4 high power LEDs at a constant current of 700mA (10W max), whilst also being dimmable, it is also an excellent driver for domestic LED lighting projects or as a replacement for a failed LED driver. See website for specs.

- Overload and short circuit protection
- Dimmable with leading edge or trailing edge triac dimmer
- Size: 112(L) x 39(W) x 25(H)mm

MP-3365

NEW $29.95

Wind Turbine Generators

Always at the forefront of alternative energy technology, we're pleased to offer a great range of wind turbine generators. All models feature external charge controllers with three phase AC output.

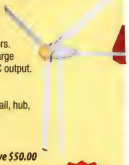

- No of Blades: 3
- Includes: generator, blades, tail, hub, nose cone, charge controller

200W 12VDC MG-4520
Was $499.00 Now $449.00 Save $50.00
300W 12VDC MG-4580
Was $699.00 Now $649.00 Save $50.00
300W 24VDC MG-4582
Was $699.00 Now $649.00 Save $50.00

Spare Parts Available Separately

NOTE: These wind generators are designed for permanent terrestrial installations only. Mounting tower and hardware not included. Not suitable for marine use.

From $449.00 SAVE $50

Universal Battery Charger

A great universal battery charger for Li-ion battery packs, AA, AAA and 9V Ni-MH and Ni-Cd rechargeable batteries. A USB port on the side accommodates the charging needs for your iPhone®, Smartphone or any USB power device.

- USB output: 5VDC, 500mA
- Size: 120(L) x 62(W) x 35(H)mm

MB-3639

Note: Batteries not included

NEW $39.95

Rotating Surge Protector with 2 x USB Outputs

Features a 90° rotating design for easy GPO switch access and 2 USB charging ports with 2.1A (total) for fast charging your iPad®, iPhone®, iPod®. This compact unit also has attractive illuminated indicators showing that power and surge protection are operating.

- Size: 112(H) x 57(W) x 42(D)mm

MS-4027

NEW $29.95

Mains Power Meter with CO_2 Measurement

This meter tells you the cost of electricity consumption of an appliance plugged into it and the amount of power used in kilowatt hours, as well as how many cumulative Kg of CO_2 the appliance is putting into the atmosphere.

- Extra large LCD for easy reading
- Size: 120(L) x 58(W) x 40(H)mm

MS-6118

BUY 2 for $40.00 SAVE $19.90

$29.95

Pure Sine Wave Inverter/Chargers

MEGA SALE!

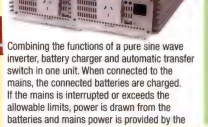

Combining the functions of a pure sine wave inverter, battery charger and automatic transfer switch in one unit. When connected to the mains, the connected batteries are charged. If the mains is interrupted or exceeds the allowable limits, power is drawn from the batteries and mains power is provided by the inverter. No more manual switching from mains to battery power!

- 12VDC, 20A

1500W Inverter/Charger MI-5260
Was $1499.00 Now $1099.00 Save $400.00
2000W Inverter/Charger MI-5262
Was $1799.00 Now $1399.00 Save $400.00

From $1099.00 SAVE $400

80W Standard Recreational Solar Package

Clean renewable energy wherever you go. Solar-convert your 4WD or caravan to generate sufficient power to operate several appliances - including your laptop, portable lighting, CB radio and 12-24V camping electricals. Just add a battery for your own self-sustained solar powered setup.

- Package includes: monocrystalline solar panel, charge controller, 2 x male and female PV connectors

ZM-9300 ***Was $365.00***

MEGA SALE!

$300.00 SAVE $65

More Recreational Solar Packages available that suits your needs. See our friendly staff for details.

Non-Insulated Spade Connectors

- 6.3mm
- Pack of 10

NEW $2.75/Pack

Socket PT-4630 $2.75
Plug PT-4631 $2.75

LED Lighting Strips

Flexible Adhesive LED Strip Lights

Made using the highest brightness 5060-SMD type LEDs, and feature 60 of these LEDs per metre of stripping. Each strip comes as a 5m length, which can be broken down into individual 5cm sections with 3x LEDs that can be individually soldered to apply power. Sold by the section and cut to your desired length. See website for full specifications. Two colours available:

Cool White ZD-0570 $2.95
Warm White ZD-0572 $2.95

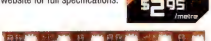

NEW $2.95/metre

IP67 Waterproof LED Flexible Strip Light

A 1m long fully waterproof, flexible LED strip light that is perfect for any outdoor application needing reliable lighting. Uses 60 of the highest brightness 5060-SMD type LEDs that are fully sheathed in a protective plastic casing to protect from water, dust and damage. See website for full specifications.

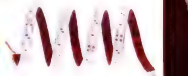

- Powered by 12VDC
- Size: 1000(L) x 10(W)mm

ZD-0579

NEW $49.95

To order call 1800 022 888

All savings based on Original RRP. Limited stock on sale items. Prices valid until 23/05/2012.

Electronic Flow Rate Meter with LCD

Supplied with a reed switch and piezo alarm, it operates from 2 x AAA batteries and a battery holder is included. When used in conjunction with the Digital Flowmeter (ZD-1202 available separately), it will count down in litres from a predetermined volume and measure flow rate, and can be used in large-scale applications such as irrigation (up to 99,500 litres). Full data sheet and instructions available on website.

- PCB/LCD size: 60(L) x 40(W)mm

ZD-1204 ***Was $69.95***

$49.95 SAVE $20

Digital Flowmeter ZD-1202
Was $49.95 Now $29.95 Save $20.00

Solder Paste SMD Syringe

Ideal for surface mount work and rework. Easy application, simply apply it to the soldering pads, put your components in place and heat it with your soldering iron.

MADE IN AUSTRALIA

- 15g
- Size: 120 (L) x 15(Dia.)mm

NS-3046

NEW $12.95

Polyurethane Potting Compound

Composed of a polyurethane base designed to electrically insulate and protect against dust and moisture.

- Allow 15 minutes for setting time
- Cures in around 4-5 hours
- 70ml

NM-2016

NEW $9.95

IP67 True RMS Autoranging CatIV DMM

Features a large, easily read display and IP67 rating, making it waterproof.

- True RMS
- CatIV, 600V, 4000 count
- Data hold & relative function
- Auto off & backlit display
- Diode test & audible continuity
- Autoranging
- 10A current range

QM-1549

NEW $79.95

Resistance Wheel

Great for experiments or selecting the best resistance for a circuit. Select from 36 values ranging from 5 ohms to 1M ohms.

- Comes complete with leads and insulated alligator clips
- Uses 0.25W resistor with 5% tolerance

RR-0700 ***Was $24.95***

$19.95 SAVE $5

Super Heavy Duty Heatsink

This black anodised heatsink is 36mm high. Unique recessed channels are incorporated into the flat side to accommodate screws, panels, heatsink brackets etc.

- Size: 125(W) x 75(L)mm

HH-8590 ***Was $19.95***

$14.95 SAVE $5

Jacob's Ladder High Voltage Display Kit MK2

Refer: Silicon Chip Magazine April 2007

With this kit and the purchase of a 12V ignition coil (available from auto stores and parts recyclers), create an awesome rising ladder of noisy sparks that emits the distinct smell of ozone. This improved circuit is suited to modern high power ignition coils and will deliver a spectacular visual display. Kit includes PCB, pre-cut wire/ladder and all electronic components.

- PCB: 170 x 76mm

KC-5445

$42.95

USB Datalogger

These USB dataloggers log temperature and humidity readings and store them in internal memory for later download to a PC. The measurement interval is adjustable - simply set up the recording parameters then download the data when you need it.

- Windows compatible
- Sizes: 100(L) x 22(W) x 20(H)mm

QP-6013 ***Was $119.00***

$99.00 SAVE $20

Open Wall Mount Rack Enclosures

Ideal for mounting in other enclosures, such as road cases, but can also be mounted stand-alone. One side is hinged so that patch panels can be easily accessed at the rear for reconfiguring patch sets.

From $39.95 SAVE $10

2U HB-5190 Was $49.95 Now $39.95 Save $10.00
4U HB-5192 Was $59.95 Now $49.95 Save $10.00

Quick Splice Connectors

Simply insert your wires and squeeze it closed to connect and crimp. Quick, easy, and secure.

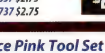

- Pack of 6

Red	*PT-4537*	*$2.75*
Blue	*PT-4637*	*$2.75*
Yellow	*PT-4737*	*$2.75*

NEW $2.75 /pack

100 Piece Driver Bit Set

The ultimate driver bit set. It has a magnetic holder, adaptors, Phillips bits, slotted bits, torx, tamperproof, pin drive, and even a wing nut driver - Fantastic. See web site for full listing.

TD-2038 ***Was $19.95***

$9.95 SAVE $10

Ferrule Crimp Terminals

Commonly referred as a bootlace crimp, these lugs are designed to neatly terminate cables before inserting them in a spring loaded or screw-down terminal.

- Pack of 20

White	*PT-4433*	*$2.95*
Red	*PT-4533*	*$2.95*
Blue	*PT-4633*	*$2.95*

NEW $2.95 /pack

149 Piece Pink Tool Set

Contains a hammer, long nose pliers, multigrips, tape measure, screwdrivers, shifting spanner, shears, driver with 20 bits, 8-piece Allen key set, 6 jewellers screwdrivers plus an assortment of nails, screws and other fasteners. An easy-to-follow How-to booklet is included on each tool and common household tasks.

$34.95 SAVE $15

- Case size: 250(W) x 322(H) x 65(D)mm

TD-2075 ***Was $49.95***

Don't forget Mother's Day 13th May!

Non-Insulated Eye Terminals

A range of non-insulated eye terminals for a variety of electronic or automotive applications.

NEW From $2.75

4mm 2.5mm²	*Pk 8*	*PT-4930*	*$2.75*	*8mm 10mm²*	*Pk 8*	*PT-4936*	*$3.45*
6mm 4mm²	*Pk 8*	*PT-4932*	*$2.75*	*8mm 25mm²*	*Pk 4*	*PT-4937*	*$3.95*
6mm 6mm²	*Pk 8*	*PT-4934*	*$2.75*	*8mm 35mm²*	*Pk 4*	*PT-4938*	*$5.95*
8mm 6mm²	*Pk 8*	*PT-4935*	*$2.75*	*8mm 50mm²*	*Pk 2*	*PT-4939*	*$4.95*

PT-4934 PT-4939

ARDUINO KITS

LeoStick Arduino Compatible

A tiny Arduino-compatible board that's so small you can plug it straight into your USB port without requiring a cable! Features a full range of analogue and digital I/O just like its larger cousins, and also has a user-controllable RGB LED on the board and an on-board Piezo/sound generator so you can make your board light up and play sounds without any extra hardware at all!

- ATmega32u4 MCU with 2.5K RAM and 32K Flash
- 6 analogue inputs (10-bit ADC) with digital I/O, 14 extra digital I/O pins

XC-4266

NEW $29.95

LeoStick Prototyping Shield

Add your own custom parts to the LeoStick to build projects or add more I/O connectors. Fits on the top of the LeoStick and provides you a free matrix of plated-through holes for your own use.

- 64 general-purpose plated holes for your parts
- All Arduino I/O headers brought up for your use
- Includes male header pins
- Gold-plated surface

XC-4268

NEW $7.95

Light Sensor Module for Arduino

This silicon light sensor outputs a voltage proportional to incoming light. Perfect for measuring light levels both indoors and out, security sensing and human feedback like waving a hand over the sensor.

- +/-60° field of view
- Supply voltage: 3.0 to 5.5VDC

XC-4228

$9.95

OLED Display Module for Arduino

High resolution, full colour OLED display module! Perfect for graphics, gauges, graphs, even make your own video game or interactive display.

- 16,384 full colour RGB pixels in a 128 x 128 format
- Active display area 28.8 x 26.8 mm, (1.5 inch diagonal)

XC-4270

NEW $49.95

EtherTen, Arduino-Compatible with Ethernet

This Arduino-compatible development board includes onboard Ethernet, a USB-serial converter, a microSD card slot for storing gigabytes of web server content or data, and even Power-over-Ethernet support.

- ATmega328P MCU running at 16MHz
- 10/100base-T Ethernet built in
- Used as a web server, remote monitoring and control, home automation projects
- 14 digital I/O lines (6 with PWM support)
- 8 analog inputs

XC-4216

$69.95

See website for full range of Arduino compatible products.

IR Temperature Sensor Module for Arduino

Connect this to your board and point it at a surface or heat source to remotely measure its temperature. This is our special version of the industrial infrared remote thermometer units with an onboard power supply, communication support and a software library and examples supplied.

- 3.3 to 5V operation
- -33 to +220°C measurement range, 1 second response time

XC-4260

NEW $34.95

H-Bridge Motor Driver Shield for Arduino

Directly drive DC motors using your Arduino compatible board and this shield, which provides PWM (Pulse-Width Modulation) motor output on 2 H-bridge channels to let your board control the speed, direction and power of two motors independently. Perfect for robotics and motor control projects.

- Drives up to 2A per motor channel
- All outputs are diode and back-EMF protected

XC-4264

NEW $29.95

Mega Prototyping Shield for Arduino

Fits the EtherMega (XC-4256) and Arduino compatible "Mega" size boards so you can fit your own parts for projects. Includes header pin sets.

- Over 300 general-purpose plated holes for your parts
- Handy 5V and GND rails
- All Arduino I/O header pins branched out for your use
- Gold-plated surface
- Reset button

XC-4257

NEW $17.95

Real-Time Clock Module for Arduino

Perfect for clock projects, dataloggers or anything that needs to know the date and time. Keeps accurate time for years using a tiny coin-cell, and is very simple to connect to your Arduino project. A driver library allows your program to easily set or read the time and date.

- Battery included

XC-4272

NEW $29.95

Arduino Compatible Relay Drivers

4 Channel Module

Drive up to 4 relays using logic-level outputs from an Arduino or other microcontroller. Isolates your microcontroller from the relay coils using FETs.

- Size: 36(W) x 23(H) x 12(D)mm

XC-4278

NEW $13.95

8 Channel Shield

Drive up to 8 relays from an Arduino using just 2 I/O pins. It communicates with your board using I2C, so you can even stack several shields together to drive 16, 24, or more outputs!

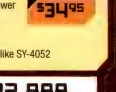

- Size: 52(W) x 66(H) x 12(D)mm

XC-4276

Both feature:

- Plugs straight into your Arduino-compatible board
- Individual LED status display on every output channel
- LED status displays for external power (and host power for XC-4276)
- Drive relay coils of 5VDC to 24VDC (with external power supply)
- Works with a wide range of relays like SY-4052

NEW $34.95

YOUR LOCAL JAYCAR STORE – Free Call Orders: 1800 022 888

• AUSTRALIAN CAPITAL TERRITORY

Belconnen Ph (02) 6253 5700
Fyshwick Ph (02) 6239 1801

• NEW SOUTH WALES

Albury Ph (02) 6021 6788
Alexandria Ph (02) 9699 4699
Bankstown Ph (02) 9709 2822
Blacktown Ph (02) 9678 9669
Bondi Junction Ph (02) 9369 3899
Brookvale Ph (02) 9905 4130
Campbelltown Ph (02) 4620 7155
Castle Hill Ph (02) 9634 4470
Coffs Harbour Ph (02) 6651 5238
Croydon Ph (02) 9799 0402
Erina Ph (02) 4365 3433
Gore Hill Ph (02) 9439 4799
Hornsby Ph (02) 9476 6221
Liverpool Ph (02) 9821 3100
Maitland Ph (02) 4934 4911
Newcastle Ph (02) 4965 3799
Penrith Ph (02) 4721 8337
Port Macquarie Ph (02) 6581 4476
Rydalmere Ph (02) 8832 3120
Sydney City Ph (02) 9267 1614
Taren Point Ph (02) 9531 7033
Tweed Heads Ph (07) 5524 6566
Wagga Wagga Ph (02) 6931 9333
Wollongong Ph (02) 4226 7089

• NORTHERN TERRITORY

Darwin Ph (08) 8948 4043

• QUEENSLAND

Aspley Ph (07) 3863 0099
Caboolture Ph (07) 5432 3152
Cairns Ph (07) 4041 6747
Capalaba Ph (07) 3245 2014
Ipswich Ph (07) 3282 5800
Labrador Ph (07) 5537 4295
Mackay Ph (07) 4953 0611
Maroochydore Ph (07) 5479 3511
Mermaid Beach Ph (07) 5596 6722
Nth Rockhampton Ph (07) 4926 4155
Townsville Ph (07) 4772 5022
Underwood Ph (07) 3841 4888
Woolloongabba Ph (07) 3393 0777

• SOUTH AUSTRALIA

Adelaide Ph (08) 8231 7355
Clovelly Park Ph (08) 8276 6901
Gepps Cross Ph (08) 8262 3200
Reynella Ph (08) 8387 3847

• TASMANIA

Hobart Ph (03) 6272 9955
Launceston Ph (03) 6334 2777

• VICTORIA

Cheltenham Ph (03) 9585 5011
Coburg Ph (03) 9384 1811
Frankston Ph (03) 9781 4100
Geelong Ph (03) 5221 5800
Hallam Ph (03) 9796 4577
Kew East Ph (03) 9859 6188
Melbourne Ph (03) 9663 2030
Ringwood Ph (03) 9870 9053
Shepparton Ph (03) 5822 4037
Springvale Ph (03) 9547 1022
Sunshine Ph (03) 9310 8066
Thomastown Ph (03) 9465 3333
Werribee Ph (03) 9741 8951

• WESTERN AUSTRALIA

Joondalup Ph (08) 9301 0916
Maddington Ph (08) 9493 4300
Mandurah Ph (08) 9586 3827
Midland Ph (08) 9250 8200
Northbridge Ph (08) 9328 8252
Rockingham Ph (08) 9592 8000

Arrival dates of new products in this flyer were confirmed at the time of print. Occasionally these dates change unexpectedly. Please ring your local store to check stock details. **Prices valid from 24th April to 23rd May 2012.**

HEAD OFFICE
320 Victoria Road, Rydalmere NSW 2116
Ph: (02) 8832 3100 Fax: (02) 8832 3169

ONLINE ORDERS
Website: www.jaycar.com.au
Email: techstore@jaycar.com.au

Jaycar Electronics
Better. More Technical.

SERVICEMAN'S LOG

The dodgy home-made stereo amplifier

Dave Thompson*

The old adage that a little knowledge is a dangerous thing certainly applies when it comes to mains-powered equipment. This home-made amplifier was so dangerous and the standard of assembly so dodgy that I really shouldn't have taken it on.

Items Covered This Month

- The dodgy, dangerous home-made stereo amplifier
- Intermittent MIDI keyboard
- Water pressure pump controller
- The freezer that really froze

*Dave Thompson, runs PC Anytime in Christchurch, NZ.

EVERY NOW AND THEN, something lands on the workbench that causes us to shake our heads in wonder. This has happened to me quite a few times over the years and it never ceases to amaze me what some people do. Sometimes they are simply rank amateurs blundering about with something they don't understand and shouldn't touch. At other times, it's so-called professionals who just do shoddy repair work.

Good workmanship is especially critical with mains-powered equipment. Aside from any performance or usability issues arising from shoddy work, there is the very real danger of killing someone, so it pays to know what you are doing when dealing with such equipment.

One memorable example was a home-made stereo amplifier that an acquaintance asked me to have a look at. He'd been given the system as part payment for some deal or other and he'd used it for a few months until one day the left channel stopped working.

I asked him to bring the whole kit and caboodle in because I wanted to test the speakers and the leads as well. After all, many a serviceman has jumped into an amplifier repair only to find that the cause was literally outside the box. In my case, I learned a long time ago to start with the easy stuff and work my way up from there.

The speakers were surprisingly well-made and it looked like they had been made from a professional kit (either that or the woodworking skills of the builder far outshone his or her electronics abilities). I tested them for continuity before removing the backs to check that the crossovers and driver units all looked and measured as they should.

There were no fuses inside the speakers, so that immediately ruled out one possible source of trouble. The crossovers were decent units and appeared to be professionally assembled. However, I didn't recognise the speakers and there were no brand names to give me a clue.

That said, they looked like a nice piece of kit. The bass drivers were beefy 150mm units and the tweeters were expensive ribbon models which looked very similar (but not the same as) a couple I purchased from Jaycar a while back. In short, it all looked good so I buttoned everything back up and connected the speakers to my workshop test amplifier using the supplied cables and gave them good thrashing . . . err, I mean workout.

They performed flawlessly and so, having ruled out the speakers and cables, I shifted my focus to the amplifier. I connected the speakers to it and this indeed confirmed that there was no sound from the left channel. In fact, there wasn't even a power "pop" when the switch was turned on or off.

There was, however, a considerable thump from the right channel when power was applied. And just to prove a point, I then swapped the speakers over but the fault remained in the left channel. There was also obviously no switch-on muting or speaker protection, which was hardly surprising given that this was an older home-built amplifier and as I discovered, was pretty much a bare-bones deal.

Everything was mounted inside a standard rack-mount case (the type with handles on each side at the front). I removed the four case screws holding the cover, lifted it clear and was immediately struck by how amateurish (read "extremely dodgy") the wiring looked. For starters, the power cable passed loosely through a badly-worn rubber grommet and (unbelievably) had a knot tied in it for strain relief!

In fact, I could see metal through the grommet where the cable had rubbed against it and the chassis over time. If the amplifier hadn't failed at this point in time (due to some other fault), it would almost certainly have made a

Servicing Stories Wanted

Do you have any good servicing stories that you would like to share in The Serviceman column in SILICON CHIP? If so, why not send those stories in to us? In doesn't matter what the story is about as long as it's in some way related to the electronics or electrical industries, to computers or even to car electronics.

We pay for all contributions published but please note that your material must be original. Send your contribution by email to: editor@siliconchip.com.au

Please be sure to include your full name and address details.

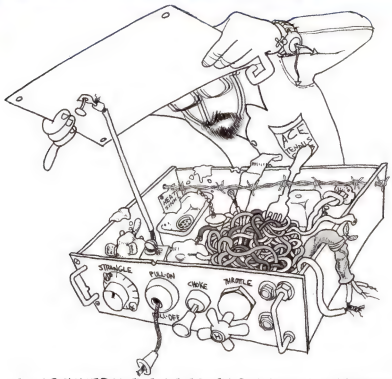

~I WAS IMMEDIATLEY STRUCK BY HOW AMATEURISH (READ "EXTREMELY DODGY") THE WIRING LOOKED

nice "bang" at some point in the future.

Unfortunately, this method of securing (if you could call it that) the mains cable didn't particularly surprise me as I have seen similar installations in the past. It may have been the way things were done 60 or 70 years ago but it's no longer acceptable or legal. So, if the amplifier was salvageable (and I very much doubted it at that point), this would have to be put right before I returned it.

The next problem was the interconnecting wiring between the boards and the various input and output sockets. Basically, the inside of the case looked like a bombed-out a pasta factory! There was wiring everywhere, nothing was tied back and the leads floated everywhere, willy-nilly.

This is not only a problem in an environment that can get hot during use (eg, near the heatsinks) but can also introduce all manner of electrical noise and hum, something not typically welcome in a hifi set-up. So this too would need tidying up if the job were to go ahead.

However, the most obvious issue I could see was the quality of the soldering; it looked like whoever built it had used a plumber's soldering iron, bar solder and a couple of tins of flux paste. It was an absolute mess and I wondered how the amplifier had ever worked at all.

And so I called my friend and told him that I'd pretty much need to rebuild the thing, aside from finding and replacing any faulty components. Of course, I fully expected him to say chuck it in the bin and would have been happy if had he done so. However, much to my surprise, he instead gave me a ceiling of "about a hundred and fifty bucks" and said that if I thought it was going to go over that figure, he would reassess things.

I said that I'd see what I could do, although I wasn't at all enthusiastic about taking the job on.

The power amplifier modules appeared to be based on the now-ancient but very popular ETI-480 50W design. In fact, I used a few of these in guitar amplifiers many years ago and they did a pretty good job. Having said that, you wouldn't bother building one these days as the SILICON CHIP SC480 amplifier module gives much better performance for about the same cost and is much more suitable for hifi use.

The faulty left-channel amplifier in the unit on my workbench must have been working at some point so the first thing I did was check the on-board fuses. These checked out OK so I took a closer look at those dodgy solder joints. Most of them looked awfully old and dry, a state of affairs likely compounded by the use of inappropriate soldering tools when the modules were originally assembled.

Many an intermittent problem has been fixed by resoldering so I decided to go over both boards. This involved first removing as much of the old solder as I possibly could using a vacuum desoldering tool. I then re-soldered every connection on both boards. There really aren't that many solder joints on these modules, so the whole process only took about 30 minutes for the two boards.

Once done, I tested the modules in-situ and found they both now worked, so my guess was right – a dodgy solder joint was the culprit after all.

While I was at it, I also reworked all the soldered joints for the wiring connections between the boards and the sockets. In the end, I replaced almost half this wiring in order to route it around the edges of the boards and used small cable ties to loom everything together. I then removed the power cable and as I did so, I discovered that the Earth wire had simply been stripped, twisted and clamped under the head of one of the power transformer mounting nuts!

Worse still, the earth wire's insulation had been so roughly removed that half the individual strands were missing while others were scored to the point of breaking away when touched. Further inspection revealed that the Active and Neutral wires were similarly damaged so I cut everything back and since the switch had spade connectors, used a crimping tool to re-terminate the Active and Neutral wires with decent matching connectors.

Next, I replaced the worn-out grommet and drilled two new holes through the bottom of the case – one to accept the mounting bolt for an Adele-type P-clip to clamp the cable and the other for a dedicated earth point. After passing the mains cable through the new grommet and the P-clip, I tightened everything and connected all the terminals, tying the leads up with cable ties where required.

The Earth wire was terminated in an

Faulty pump pressure controller

This next story comes from K. G. of Yattalunga, SA and concerns repairs to a pressure control unit in a water pump. Here's what happened . . .

Roger, a neighbour of mine, has a pump to cycle rain water into his house, as is quite common these days. However, after a recent prolonged period of operation, the pump wouldn't restart and he quickly diagnosed a faulty run capacitor. The fault was obvious, as the capacitor had oozed some of its innards to the outside and when I checked it with a capacitance tester it showed open circuit.

Roger fitted a new capacitor and the pump was restored to normal operation but in reassembling the unit, one of the threaded water connections was damaged. This was part of the housing of the pump control unit which is branded "Presscontrol".

These controllers are widely used for this type of service across several brands of pump and it turns out that my own pump, although a different brand to my neighbour's, uses the same Presscontrol control unit. In operation, the control unit senses the pressure drop in the pipe when a tap is turned on and switches on the pump. Then, when the flow rate drops below a threshold, the pump turns off.

Because of the damage, Roger had to buy a new complete unit as the housing isn't available as a separate unit. A phone call to a local supplier resulted in a trip to the establishment but contrary to the telephoned information, they were in fact out of stock. However the helpful sales assistant said they had a secondhand unit which had a faulty electronics board and as they had made the error and could not supply a new unit from stock, he could have the secondhand one free of charge. However, it would mean swapping his good board over into the secondhand housing.

On the surface, this seemed to be a simple task but like many such tasks it turned out to be not quite that simple.

The board is held in the housing on three plastic pillars which protrude through the board and a plastic cover is installed over the board. There are spring clips which go over the pillars and these press down onto the cover and hold it and the board in place against shoulders on the pillars. These clips are round and have "fingers" going in towards the centre of the central hole. When the clip is fitted, the fingers dig into the plastic pillar, making it very difficult to remove.

Eventually, we managed to get the clips off without damaging the pillars so much that the board couldn't be held in place. Roger then completed the re-assembly of the pump and returned it successfully to service.

This left us with the broken housing from Roger's original unit and a faulty PCB from the secondhand unit. Given the cost of a new spare part, it was worth spending some time to see if the board could be repaired for use as a spare. And so I took it home for further investigation.

When I got it onto the workbench and had a good look, it turned out to be not that complicated. A 4093 CMOS quad NAND Schmitt trigger was the most complex part on the board and I could recognise the power supply components. This power supply runs directly from the mains and uses a capacitor in series with the Active and a rectifier diode, filter capacitor and zener diode to produce a DC rail to run the CMOS device.

In addition, a relay with mains rated contacts to switch power to the motor was included and the labelling on the relay indicated it had a 24V coil.

I connected the PCB to the mains using a special cord I keep for this sort of job. This cord has a well-insulated in-line fuse in case anything goes awry during testing and of course, great care must be taken to avoid contacting the high-voltage Active conductors on the PCB.

On powering up the board, I measured 8V DC on the 4093 which I judged to be correct. I then checked the voltage on the supply side of the relay coil. This measured just 13V – not enough to pull in the relay.

My next step was to check the ESR of the main electrolytic filter capacitor (47µF 50V) and this turned out to be well inside the recommended limit. Similarly, the 100Ω resistor in series with the mains Active also tested OK. Then came the big capacitor and I was immediately suspicious. It was labelled 1µF 400V DC but had none of the usual mains-rated labelling on it.

I tested its capacitance and it measured just 235nF which is about one quarter of its labelled value. As a result, I replaced it with a 1µF mains-rated unit which fortunately fitted on the PCB, despite being quite a bit larger than the original.

On powering up the board, I was immediately greeted with the sound of the relay operating and both the green and orange LEDs lighting whereas before, only the green one lit. I then checked the voltage on the supply pin of the relay coil and found it to be exactly 24V.

So the exercise was well worthwhile. Roger and I now have a spare controller board should either of our controllers fail.

eyelet lug and bolted to the chassis. I used a couple of star washers, one on either side of the eyelet, and tightened it down with a "Nylock" style locking nut to ensure a sound physical and electrical connection. There is no way this can now come loose, so a decent earth connection is guaranteed.

Once all was tidy inside the case, the cover was replaced and the unit given a good listening test. Its performance was OK but its certainly not up to today's standards.

So why did I go to so much bother on a repair that was simply uneconomic? The answer is that I spent a lot longer on this than I should have because the client was someone I knew. That said, far better quality units are now available for very reasonable money and dinosaurs like this are really not worth fixing.

It's clear that whoever built this amplifier wasn't very competent and nor did they have the good sense to have someone who was check their work. I shudder to think how many other

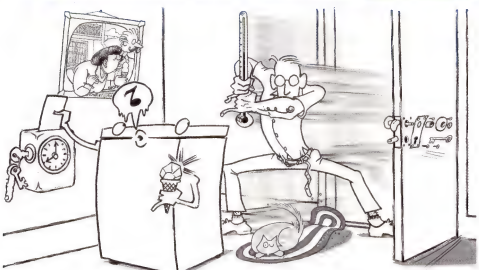

home-made mains-powered devices are out there in this kind of condition.

Midi keyboard

One of my "other" hobbies is music and this is partly why I became interested in computers in the early 80s. Australia led the way in the late 1970s and early 1980s with music computers like the much-lauded (and expensive) Fairlight, used by such musical luminaries as Peter Gabriel, Duran Duran and Jan Hammer (who produced the original Miami Vice theme song on a Fairlight CMI).

By today's standards, the original Fairlight range looks rather quaint but we should not underestimate the impact that these early "music-specific" computers had on the recording scene.

Music and electronics in general have gone hand in hand since the early Moog days and it's no surprise that the main remaining use of valve technology is in audio (particularly in guitar amplifiers).

Since I am also known as a musician, I sometimes get music-related hardware in for repair. My last such job involved a so-called MIDI keyboard. MIDI stands for Musical Instrument Digital Interface and is a standard that's used for controlling and connecting compatible electronic instruments to each other and to computers (and vice versa).

In MIDI devices, connections are commonly made via old-style DIN-5 plugs, similar to those used by older-style AT computer keyboards.

This particular MIDI keyboard was a reasonably common piece of musical hardware. And although it looks like an electric piano, or one of those portable keyboards with all the drum sounds and rhythms programmed in, it is not an instrument in itself. The keyboard produces no sound (other than a dull plastic "thunk" if you really hammer the keys down) and is used purely to control other MIDI-capable devices.

Basically, it can be thought of as a computer keyboard, except instead of having letters and numbers, it uses a piano-style set of black and white keys. When this keyboard controls a computerised piano, it becomes a piano keyboard. However, it can also be used to play computer-generated guitars, drums, bass and any one of a gazillion other sampled or waveform generated/synthesised sounds.

In this case, the keyboard was an Evolution MK-149 and it was in for repair because its operation was intermittent. It would work happily for awhile and then suddenly stop working, all at completely random intervals, and this was driving the owner mad.

Now I'm not a keyboard technician but being a male electronics technician gave me all the qualifications I needed to at least pull it apart and have a look around. Two dozen or so PK-style screws held the top of the keyboard to the bottom section and after removing the screws, the case easily split apart.

The main keyboard section was basically a set of 48 plastic "keys" which actuated PCB-mounted switches, with everything mounted onto a single PCB assembly. Since this all functioned perfectly when the keyboard was working, I figured that the problem wasn't likely to be there.

Fortunately, everything else, including the related circuitry, was easy to see. I began by checking the connections to and from each PCB to the output sockets and all looked solid. However, when checking the MIDI In/Out DIN sockets, I noticed a small spring which was completely out of place. It was caught on one of the soldered pins on the output socket and to the naked eye this looked to be bridging or shorting the adjacent pin.

When I looked at it under a magnifying glass, I could see a very slight gap between the spring and the pin and using my continuity tester, I confirmed that there was no connection. However, with just the right amount of vibration, the spring would flex and short out the pins. This certainly wasn't right and bridging those pins would be enough to cause the MIDI side of things to stop working. I didn't know what each pin did data-wise but it certainly wouldn't do to have one touching the other.

It was easy enough to remove the spring but I then had a problem tracking down its original location. All the keyboard springs were in place and besides, they were much heavier than this small spring. What's more, this particular keyboard model has no springs for centring the modulation and pitch wheels, so it couldn't have come from there.

After spending a good 10 minutes going over everything, I still couldn't see anywhere the spring could have come from. In the end, I concluded that it was a "stray" and had probably been there since the keyboard was assembled at the factory and was only now causing problems.

The client reports the keyboard now works as expected so problem solved!

The freezer that really froze

A. F. of Chinderah, NSW recently did battle with a freezer that was working overtime. Here's his story . . .

I enjoy my repair work when my

customers become friends. And this was the case with Enid who had an split-system air-conditioning unit that had twice been repaired but had stopped working for the third time. She had then decided to forgo having it repaired a third time, as she just couldn't afford the repeated call-out costs.

When I heard about her plight, I agreed to look at the unit without charge. I soon found that the circuit breaker was open and I reset this without any further problems showing up, even nine months later.

Because I hadn't found a cause, I kept in regular touch with Enid in case the unit went faulty again. In any case, this is a good practice, as such calls sometimes result in new customers due to word-of mouth recommendation.

One day, when I called, Enid invited me in for a cup of tea, along with an offer for some fruit and ice-cream. I was then asked if I would scoop out the ice-cream, as Enid did not have the strength to do this.

When I tackled the job, I was not surprised that Enid did not want the task – the ice-cream was as hard as a block of solid lead. In fact, I only managed to scoop out a small slither and it was obvious that her freezer was running much too cold.

I listened to the sound of the deep freeze motor and all the time that I was there, the motor didn't stop. I mentioned this to Enid and suggested that I install a thermometer in the deep freeze to check its temperature.

The next time I was in the neighbourhood, I called in and placed the remote sensor bulb of an indoor/outdoor thermometer into the freezer compartment. It eventually indicated -39°C so it was no wonder the ice-cream was hard – freezer temperatures should be around -18°C.

While I was there, I also installed a mains power meter but not once did the thermostat turn off the power over a period of about one hour. The power consumption at -39°C was about 60W and it was running continuously.

To speed up the repair, I left the food inside the freezer and just tilted it until it was leaning against a solid bench top. This allowed me to access the thermostat which was mounted underneath, near the compressor. I then carefully marked all the leads that were connected to the thermostat and drew a diagram showing what went where.

When I subsequently removed the leads to the thermostat, I found that the contacts were still closed at the -39°C temperature, which was obviously wrong. I then had to destroy the thermostat to get to the contacts and just as I expected, they were welded together.

I phoned our local appliance spare parts seller but they wanted $85 for a new thermostat. A search on eBay soon located a similar part for $33 including postage, so I ordered one and it arrived four days later.

It now keeps the temperature at around -18°C. What's more, the ice-cream is now soft and easily scooped, so I have made myself redundant at ice-cream serving.

While I had all my equipment connected to the freezer, I watched the mains power meter for more information. I did not tell Enid how much electricity her appliance had been wasting and in any case, the cost is unknown as I have no way of knowing how long the thermostat had been faulty.

I wonder how many other freezers have welded thermostat contacts and motors that run 24 hours a day? Most people would not have the knowledge to check. **SC**

5 GOOD REASONS

to use Switchmode – the repair specialists to industry and defence

specialised service

Benefit from our purpose-built facilities, efficient and effective service. Since 1984 we have specialised solely in the repair of all types of power supplies up to 50KVA.

turn-around time

We provide three levels of service: Standard (10 days) Standard Plus (4 days) Emergency (24 hours)

access to techs and engineers

Talk directly to our highly skilled Technicians and Engineers for immediate technical and personal assistance.

quality assurance

Accredited to ISO 9001 with SAI Global and ISO 17025 with NATA. Documented, externally audited management systems, deliver a repeatable, reliable service.

convenience and certainty

We provide fixed price quotes after assessment of goods and cost-effective maintenance, tailored to meet individual customers needs.

TAKE ADVANTAGE OF OUR RESOURCES

SWITCH MODE

NATA ACCREDITED FOR TECHNICAL COMPETENCE

Certified Systems Quality ISO 9001 SAI GLOBAL

DEFENCE RECOGNISED SUPPLIER Department of Defence

SWITCHMODE POWER SUPPLIES Pty Ltd ABN 54 003 958 030

Unit 1/37 Leighton Place Hornsby NSW 2077

(PO Box 606 Hornsby NSW 1630)

Tel: 61 2 9476 0300 Fax: 61 2 9476 0479

Email: service@switchmode.com.au Website: www.switchmode.com.au

PRODUCT SHOWCASE

PowerSTAR MPPT Solar Regulator from Roc-Solid

It's one thing to put an array of solar panels on your roof. It's another thing altogether to obtain the maximum power from those solar panels.

Far too many people wonder why their "1kW" solar cell installation delivers perhaps only half to two thirds of its rated output, this with bright sunshine and clean cells.

For many people, that's because their installer saved some money and put in a cheap regulator. Not only will they cheat you out of power, in some cases they can allow the solar panel to overcharge and therefore damage the very expensive battery bank.

Roc-Solid have released an Australian-designed MPPT solar regulator which not only boasts that it will never allow your batteries to be cooked, it also utilises Maximum Power Point Tracking which ensures that the maximum possible power is extracted from your solar panels.

There are several regulators in the Roc-Solid range. The PowerSTAR PS-2024-D MPPT Regulator is fully user-configurable and has the ability to save configuration settings on a PC. More than that, it is also a data logger, storing performance data for 400 days. This data includes amp-hours in, amp-hours out, maximum and minimum battery voltages, time to float and days to next equalisation.

Output to PC is via a plug-in USB interface (as shown at right of unit). Its flexible programming modes (either user-defined or via the PowerSTAR settings manager) are assisted by a large, easy-to-read on-board LCD screen

Overall the PS-2024-D is just 195 x 92 x 65m (including mounting provision).

While the PowerSTAR PS-2024-D is intended for the installation market, it is simple enough to allow the average user to retro-fit to an existing system.

A quick-start guide is included with the unit but a comprehensive user manual (in PDF) can be downloaded from the company website, as can the PowerSTAR Settings Manager (Windows) software.

PowerSTAR regulators are sold through a network of distributors throughout Australia. Your closest ROC-SOLID distributor can be found on the 'Where to buy' page on the Roc-Solid website.

Contact:
ROC-SOLID Technologies
37 Belford Ave, Devon Park, SA 5008.
Website: www.roc-solidsolar.com.au

New WES 2012 trade/wholesale catalog

Now in its 28th year, major trade/wholesale electronics parts supplier WES Components have released their new 2012 Trade Catalog.

WES is constantly adding new products to their range with the result that the new catalog, a 1272-page monster, has more than 150 new pages.

There are several notable differences between the new catalog and previous versions, one being that it is now in full colour and with an improved page format.

However, the main difference is that all prices exclude GST, as most wholesalers quote GST-exempt prices.

It can be obtained either in hard copy direct from WES, or on-line (PDF) format.

Contact:
WES Components
138 Liverpool Rd, Ashfield NSW 2131
Tel: (02) 9797 9866 **Fax**: (02) 9716 6015
Website: www.wes.net.au

Rohde & Schwarz and HAMEG Instruments under one banner

Almost anywhere in the world, test and measurement products from HAMEG Instruments are now directly available from Rohde & Schwarz. This is why these products will receive a new logo that contains the names of both companies – a move that is intended to further increase the brand awareness and growth of HAMEG Instruments in both the domestic and international marketplace.

HAMEG Instruments has been a Rohde & Schwarz subsidiary since 2005. After several years of separate branding, the new dual logo containing both company names is an important step toward integrating HAMEG products more tightly into the Rohde & Schwarz portfolio.

Since the end of last year, HAMEG products have been an integral part of the portfolio offered by the Rohde & Schwarz sales organisation.

Contact:
Rohde & Schwarz (Aust) Pty Ltd
Unit 2, 75 Epping Rd, North Ryde NSW 2113
Tel: (02) 8874 5111 **Fax:** (02) 8874 5199
Website: www.rohde-schwarz.com.au

Verbatim LEDs – 80% Energy Saving

Verbatim are proving to be a major player in LED lighting with an ever-increasing LED product offering for residential and commercial applications.

The latest products released include a 600lm AR111, G53 base low voltage spot as a replacement for 50W halogen spots, a 600lm PAR30 high voltage flood light as a replacement for 75Whalogen lamps and a 800lm PAR38 high voltage flood light suitable for 100W halogen or incandescent PAR lamps.

Verbatim's LED lamps have a lifetime between 25,000 and 30,000 hrs and offer a significant energy savings of 80% when compared to halogen lamps.

Contact:
Verbatim Australia
6 Weir St, Glen Iris, Vic 3146
Tel: (03) 9823 0999 **Fax:** (03) 9824 7011
Website: www.verbatimlighting.com.au

Roland DG launches online store

Roland DG Australia, a leading provider of wide format print solutions, 3D milling and engraving technologies, today announced the launch of the Roland DG Australia Online Store.

To support the recently launched iCreate website for the Roland iModela, the Roland DG Australia Store offers secure online purchasing for the iModela, iModela accessories, and also a range of Pantone and SAi software products.

Contact:
Roland DG Australia
Allambie Grove Bsns Park, 14/25 Frenchs Forest Rd, Frenchs Forest NSW 2086.
Tel: (02) 9975 0000 **Fax:** (02) 9975 0001
Website: www.rolanddg.com.au

Windspeed and direction monitoring

The KTA-250 is an anemometer monitoring and alarming card which allows the wind speed and direction to be measured with a Davis Instruments DS7911 Anemometer without the need for the entire weather station.

Monitoring of the wind speed and direction can be done via the analog retransmission channels with 0-5V, 1-5V, 0-20mA or 4-20mA outputs. As well as monitoring the speed and direction, two alarm relays can be programmed to activate at a certain speed or wind direction range, or combination of the two. Wind speed and direction can also be monitored using the Modbus protocol with either USB or 2-wire RS-485 connection. All settings are set using the Modbus protocol and the provided software.

An optional LCD screen and 64K Datalogging memory are available.

Prices start from $179.00+GST.

Contact:
Ocean Controls
PO Box 2191, Seaford BC, Vic, 3198
Tel: (03) 9782 5882 **Fax:** (03) 9782 5517
Website: www.oceancontrols.com.au

Tektronix "Thunderbolt" test solution

Thunderbolt

Tektronix, Inc. has a comprehensive test solution for Thunderbolt, a new, high-speed, multi-protocol I/O technology designed to provide headroom for next generation display and I/O requirements.

The new solution includes a 20GHz DSA70000 Series Oscilloscope, 12.5Gb/s BSA Series BERTScope, and a DSA8300 Series Sampling Oscilloscope. More information can be found at www.tek.com/webinar/10gpbs-thunderbolt-conformance-testing

The Tektronix solution serves the comprehensive needs of Thunderbolt physical layer testing and spec conformance validation. Thunderbolt's four channel 10.3Gbps I/O architecture is the most significant advancement in PC I/O design ever introduced into the consumer level electronics industry and Tektronix is dedicated to delivery of a broad portfolio of tools to facilitate the successful deployment of this new technology working in concert with Intel.

The Tektronix physical layer electrical validation solution for Thunderbolt is now available.

Contact:
TekMark Australia Pty Ltd
Suite 302, 18-20 Orion Rd, Lane Cove 2066
Tel: 1300 811 355 **Fax:** (02) 9418 8485
Website: www.tekmarkgroup.com

Pt.2: by ANDREW LEVIDO

1.5kW Induction Motor Speed Controller, Pt.2

Last month, we described the features of the 1.5kW Induction Motor Speed Controller and explained in detail how it works. This month we describe its construction and testing and give some guidelines for use.

BEFORE GOING any further, we must again remind readers that this project is intended only for experienced constructors. **Most of the circuit operates at 230VAC mains potential and it has portions operating at 325-350V DC. Furthermore, the circuit can remain potentially lethal even after the 230VAC mains has been removed.**

Construction begins with assembly of the PCB. Fig.8 shows the component overlay. It is a fairly straightforward layout except that some components are mounted on the underside of the board and there are five surface-mount components to contend with. Fortunately, the surface-mount components are all passive (four 10µF capacitors in

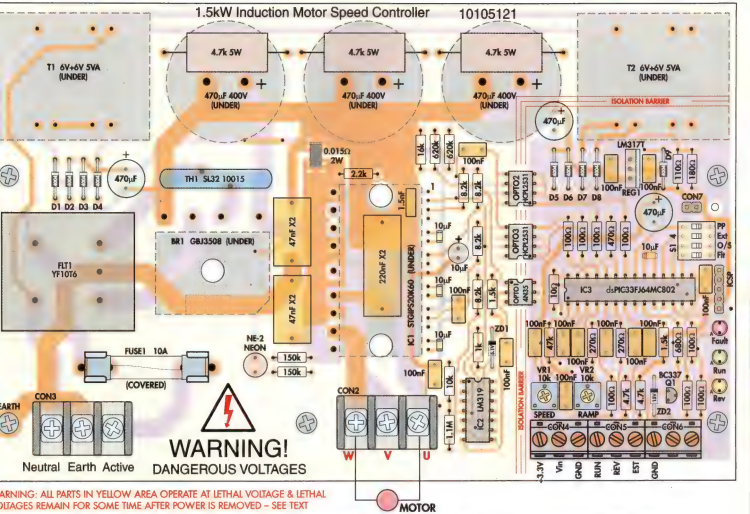

Fig.8: install the parts on the PCB as shown on this layout diagram. Transformers T1 & T2, the three 470µF 400V electrolytic capacitors, bridge rectifier BR1 and IC1 (the IGBT module) are mounted on the underside of the board. Make sure that the electrolytic capacitors are orientated correctly.

2012/0805 packages and one 0.015Ω 2W resistor in a 6432/2512 package) and are quite easy to install with a conventional soldering iron, with a small tip.

Start by loading these SMT components, then move on to the rest of the components in reverse height order. Don't install any of the parts that mount underneath the board at this stage.

Note that the 4N35 opto-coupler is mounted the opposite way to the two HCPL2531s. The 4.7kΩ 5W resistors should be mounted two or three millimetres proud of the board to ensure free airflow on all sides.

The input surge-limiting NTC thermistor TH1 should be mounted such that there is about 15mm of bare lead exposed above the surface of the board. This serves two purposes: first, it prevents the solder joints from overheating, since this component runs quite hot at full load. And second, it allows the thermistor to be bent down parallel with the PCB so that it will fit inside the IP65 case and not foul the lid. This

WARNING: DANGEROUS VOLTAGES

This circuit is directly connected to the 230VAC mains. As such, most of the parts and wiring operate at mains potential and there are also sections running at 325-350V DC. Contact with any part of these non-isolated circuit sections could prove FATAL.

Note also that the circuit can remain potentially lethal even after the 230VAC mains supply has been disconnected!

To ensure safety, this circuit MUST NOT be operated unless it is fully enclosed in a plastic case. Do not connect this device to the mains with the lid of the case removed. DO NOT TOUCH any part of the circuit unless the power cord is unplugged from the mains socket, the on-board neon indicator has extinguished and at least three minutes have elapsed since power was removed (and the voltage across the 470µF 400V capacitors has been checked with a multimeter – see text in Pt.1).

This is not a project for the inexperienced. Do not attempt to build it unless you understand what you are doing and are experienced working with high-voltage circuits.

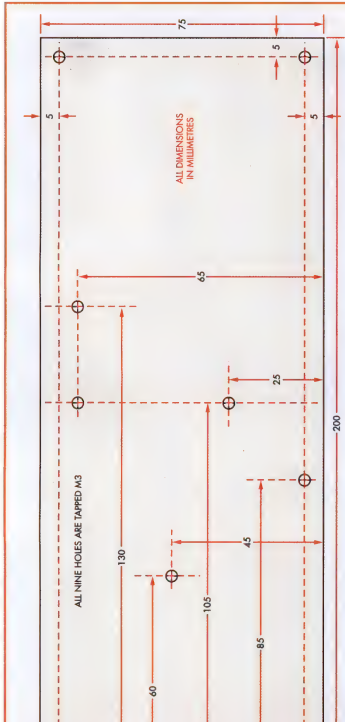

Fig.9: this full-size diagram shows the drilling details for the heatsink. It should be copied, attached to the heatsink with sticky tape and used as a drilling template. Use a small pilot drill (eg, 1mm) to start the holes, then drill each one to a depth of about 8mm using a 2.5mm drill. The holes are then tapped to 3mm. Use plenty of light machine oil to lubricate both the drills and the tap during this procedure and withdraw these parts frequently from the hole being worked on to clear any metal swarf (if this is not done, the aluminium swarf will bind to the tool and spoil both the tool and the job). Note: the drilling diagram is also available in PDF format from the SILICON CHIP website.

can be seen in the photograph at the top of page 68.

However, don't bend the thermistor down at this stage because you need access to the screw hole for the bridge rectifier, BR1. The bridge rectifier must be secured to the heatsink and soldered to the PCB, before the thermistor is bent over.

You do not need to install the ICSP connector or the heatsink thermistor connector, CON7. We found it easier to first mount the thermistor on the heatsink with its leads poking upwards so that they can be later soldered directly to CON7's pads.

Next you can begin mounting the parts on the bottom of the board. Leave the IGBT driver and bridge rectifier off for now. The polarity of the large electrolytic capacitors must be correct – a mistake here would be disastrous (not to mention messy and dangerous).

Heatsink assembly

Drill and tap nine M3 holes in the machined surface of the heatsink according to the drilling diagram (Fig.9). Make sure the holes are carefully deburred so that the heatsink surface is completely smooth.

Use the PCB as a template to bend the leads of the bridge rectifier upwards so that the leads fit and the mounting hole is directly under the corresponding hole in the PCB.

Before fitting the heatsink thermistor, smear a small amount of heatsink compound on the mounting lug and then attach it to the heatsink with an M3 x 6mm screw and lockwasher. Orientate the lug so that the thermistor wires run to the right – see Fig.10.

Now apply a thin smear of heatsink compound on the mounting surfaces of the IGBT driver (IC1) and bridge rectifier (BR1). Insert them in their appropriate places in the circuit board (from the bottom) but don't solder them yet. You can stop them from falling out when you turn the board upright by making a small bend in a couple of the leads.

Mount the PCB assembly on the heatsink using M3 x 16mm screws and 8mm spacers as shown in Fig.10. Once the board is firmly screwed into place you can screw down the IGBT and diode bridges using M3 x 10mm screws. These screws are inserted through the holes in the PCB but the flat washers have to be manipulated into place under the board using tweezers.

Alternatively, you could glue them in place on the devices with a drop of superglue before assembly. Tighten the screws carefully, making sure both devices are flat against the heatsink.

Once everything is in place, solder the pins from the top, clipping off any excess very carefully. Finally, you can feed the heatsink thermistor wires through the hole in the PCB and solder

This view shows the underside of the PCB. Note the aluminium brackets attached to either side of the heatsink.

them to the CON7 pads. It doesn't matter which lead solders to which pad.

That completes the assembly of the controller module.

Case and wiring

Since much of the printed circuit board is at lethal potential, it is essential that the speed controller be mounted in a fully enclosed case. Whatever case you choose, you must take care that the mains wiring is fully compliant with the relevant standards. If the case is metal, it must be securely earthed.

Note that the Speed Controller dissipates around 28W at idle and over 50W at full power. So whichever case you use, it should have a reasonable internal volume for air to circulate. Keep it out of direct sunlight to avoid overheating which will cause an automatic shut-down. For use with very high ambient temperatures, a larger case will necessary.

Note also that if a plastic case is used, there must be no metal screws protruding through to the outside since that would present a safety hazard.

We assembled our controller in a plastic case measuring 200mm x 250mm x 95mm (Altronics H0363). We mounted the controller inside the case on a pair of brackets cut from aluminium angle. The brackets are screwed to the heatsink with M3 x 10mm screws and secured to the short pillars in the base of the enclosure with the supplied self-tapping screws.

The mains cable enters via a gland and is secured to the inside of the case

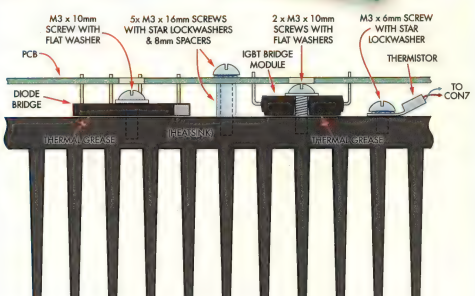

Fig.10: diode bridge BR1, the IGBT module (IC1) and the 10kΩ thermistor are mounted on the heatsink as shown here. The PCB is attached to the heatsink at five points on 8mm spacers while the leads from the heatsink thermistor are fed up through an adjacent hole in the PCB and soldered to CON7's pads.

Parts List: Induction Motor Speed Controller

1 double-sided PCB, code 10105121, 200.5 x 125mm
1 front panel label (147 x 102)
1 diecast heatsink, 200 x 75 x 48mm (Jaycar HH8546, Altronics H0536)
1 IP65 ABS case, 250 x 200 x 130mm (Altronics H0364A)
1 IP68 cable gland to suit 4-8mm cable (Jaycar HP0724, Altronics H4313)
1 surface-mount mains socket (Jaycar PS4094, Altronics P8243)
1 10A mains lead
1 ferrite suppression bead, 28mm long, 15mm OD, 7mm ID (Jaycar LF1260, Altronics L4802A)
2 6+6V 5VA PCB-mount transformers (Altronics M7052A)
2 10kΩ mini horizontal trimpots (VR1, VR2)
2 PCB-mount 3AG fuse clips (F1)
1 10A 3AG fast-blow fuse (F1)
1 fuse cover for F1
1 SL32 10015 NTC thermistor (TH1) (Element14 1653459)
1 10kΩ NTC thermistor with mounting lug (Altronics R4112)
1 YF10T6 mains filter (FLT1) (Jaycar MS4000)
1 NE-2 Neon lamp (Jaycar SL2690, Altronics S4010)
2 3-way PCB-mount terminal barriers, 8.25mm pitch (CON2, CON3) (Altronics P2102)
3 3-way terminal blocks, 5/5.08mm pitch (CON4-CON6)
1 4-way DIP switch (LK1-LK4)
1 5-way pin header, 2.54mm pitch (ICSP)
1 2-way pin header, 2.54mm pitch (CON7)
1 Nylon* P-clamp to suit 5mm cable
8 small cable ties
1 Nylon* M4 x 15mm machine screw
3 Nylon* M4 nuts
5 M3 x 16mm machine screws
6 M3 x 10mm machine screws
5 M3 x 10mm untapped metal spacers
10 M3 star washers
3 M3 flat washers
4 M3 nuts
4 No.4 x 9mm self-tapping screws
1 200mm length mains-rated heavy-duty green/yellow striped wire
1 200mm length mains-rated extra-heavy-duty red wire
1 200mm length mains-rated extra-heavy-duty dark-blue wire
1 200mm length mains-rated extra-heavy-duty white wire
1 300mm length aluminium L-shaped extrusion, 20 x 10mm

Use genuine Nylon (polyamide) parts rather than clear plastic

Semiconductors

1 STGIPS20K60 3-phase IGBT bridge (IC1) (Mouser 511-STGIPS20K60, Digi-Key 497-10573-5-ND)
1 LM319 dual high-speed comparator (IC2)
1 dsPIC33FJ64MC802 16-bit microcontroller (Element14 1576842) programmed with 1010512A (IC3)
1 4N35 optocoupler (OPTO1) (Altronics Z1647)
2 HCPL2531 high-speed dual optocouplers (OPTO2, OPTO3) (Element14 1021247)
1 LM317T adjustable linear regulator (REG1)
1 3mm green LED (LED1)
1 3mm yellow LED (LED2)
1 3mm red LED (LED3)
1 BC337 NPN transistor (Q1)
1 5.1V 0.4W/1W zener diode (ZD1)
1 15V 1W zener diode (ZD2)
1 GBJ3508 35A SIL bridge rectifier (BR1) (Mouser 833-GBJ3508-BP, Digi-Key GBJ3508-BPMS-ND)
9 1N4004 1A diodes (D1-D9)

Capacitors

3 470µF 400V snap-in electrolytic (Altronics R5164)
3 470µF 25V electrolytic
1 10µF 25V electrolytic
4 10µF 25V SMD ceramic [2012/0805] (Element14 1867958)
1 220nF X2 250VAC (22.5mm pitch) (Jaycar RG5238, Altronics R3127)
14 100nF monolithic ceramic
2 47nF X2 250VAC (15mm pitch) (Jaycar RG5234, Altronics R3117)
1 1.5nF MKT or ceramic

Resistors (0.25W, 1%)

1 1.1MΩ	2 1.5kΩ
2 620kΩ	1 1kΩ
2 150kΩ	1 680Ω
1 47kΩ	1 470Ω
1 16kΩ	2 270Ω
1 10kΩ	1 180Ω
4 8.2kΩ	1 110Ω
3 4.7kΩ 5W 5%	8 100Ω
2 4.7kΩ	1 10Ω
1 2.2kΩ	

1 0.015Ω 2W SMD resistor [6432/2512] (Element14 1100059, Digi-Key MCS3264R015FERCT-ND)

Note: additional components required for external motor run/speed/direction control

with a Nylon P-clamp. Use a Nylon screw and nut to secure it (not metal) and **fit a second Nylon nut to lock the first one into place, so that the assembly cannot possibly come loose.**

We installed a surface mount mains socket on the bottom of the case but you should use a weatherproof socket if your controller is to be used outdoors; with a pool pump, for example.

Complete the mains wiring according to Fig.11, taking care that everything is properly secured with cable ties. **Note that, for a plastic case, the Earth lead from the mains cable goes direct to the Earth terminal on the mains socket (GPO). A separate earth lead is then run from the GPO to the Earth terminal on the PCB.**

Don't forget the ferrite RF suppressor on the output leads. This helps reduce the RFI radiated from the motor cable. Finally, double check your work.

Testing

To test the control electronics, take a short piece of hook-up wire and connect it between the RUN terminal and one of the GND terminals. Ensure that all the DIP switches are off (sliders to the left), and set both trimpots to about 50%. Do not connect a load at this stage.

With the unit on the bench, apply power and observe the neon and LEDs. The neon should come on almost immediately and the green LED should begin flashing, as the microcontroller ramps up the output frequency. After about 15 seconds, the flashing should stop and the green LED should remain lit.

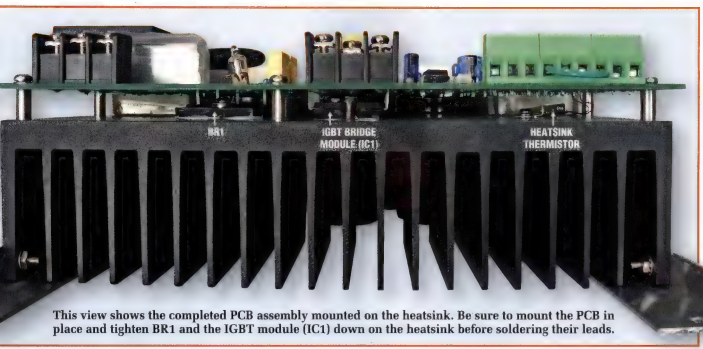

This view shows the completed PCB assembly mounted on the heatsink. Be sure to mount the PCB in place and tighten BR1 and the IGBT module (IC1) down on the heatsink before soldering their leads.

If this is the case, the micro is working fine. **If there is a problem, switch off, unplug the unit from the mains socket and wait until the neon has fully extinguished. You should then wait a further three minutes and check the voltage across the 470µF 400V electrolytics to make sure the circuit is safe.** You can then carefully inspect your work for errors.

Avoid making any measurements or troubleshooting this circuit while it is live. Only the portion of the circuit in the bottom right hand corner of the board inside the marked isolation barrier is isolated. The rest is at 230VAC mains potential and is lethal.

If you want to check the control circuitry more thoroughly, first check that the unit is disconnected from the mains and that the 400µF 400V electrolytics have discharged, then feed 3.3V from an external regulated power supply into terminals 1 and 3 of the control terminal block (ie, at CON4). You could also simultaneously feed 15V from a second supply into the +15VHOT line (cathodes of D2 & D3) to check the control circuitry on the high-voltage side (the negative side of this supply can be connected to the anodes of D1 & D4).

In fact we debugged this circuit in this manner, even adding a third supply at 60V DC feeding the DC bus and some 10W load resistors. This way you can check pretty much all of the circuitry in a safe manner.

Using it

Once you've made some basic

Table 2: Capacitor Codes

Value	µF Value	IEC Code	EIA Code
220nF	0.22µF	220n	224
100nF	0.1µF	100n	104
47nF	.047µF	47n	473
1.5nF	.0015µF	1n5	152

Table 1: Resistor Colour Codes

❑	No.	Value	4-Band Code (1%)	5-Band Code (1%)
❑	1	1.1MΩ	brown brown green brown	brown brown black yellow brown
❑	2	620kΩ	blue red yellow brown	blue red black orange brown
❑	2	150kΩ	brown green yellow brown	brown green black orange brown
❑	1	47kΩ	yellow violet orange brown	yellow violet black red brown
❑	1	16kΩ	brown blue orange brown	brown blue black red brown
❑	1	10kΩ	brown black orange brown	brown black black red brown
❑	4	8.2kΩ	grey red red brown	grey red black brown brown
❑	2	4.7kΩ	yellow violet red brown	yellow violet black brown brown
❑	1	2.2kΩ	red red red brown	red red black brown brown
❑	2	1.5kΩ	brown green red brown	brown green black brown brown
❑	1	1kΩ	brown black red brown	brown black black brown brown
❑	1	680Ω	blue grey brown brown	blue grey black black brown
❑	1	470Ω	yellow violet brown brown	yellow violet black black brown
❑	2	270Ω	red violet brown brown	red violet black black brown
❑	1	180Ω	brown grey brown brown	brown grey black black brown
❑	1	110Ω	brown brown brown brown	brown brown black black brown
❑	8	100Ω	brown black brown brown	brown black black black brown
❑	1	10Ω	brown black black brown	brown black black gold brown

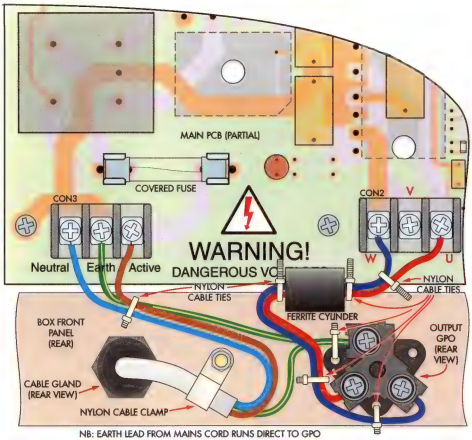

Fig.11: the mains cable is run into the case through a cable gland and is then secured using a Nylon P-clamp. Use an M4 x 15mm Nylon screw to secure this clamp to the case and fit two M4 Nylon nuts to lock the assembly in place. The output leads from CON2 are run to the GPO via a ferrite suppression cylinder. Use cable ties to secure the leads and the ferrite cylinder as shown.

This view shows the prototype with the front-panel label in place. If you are using external controls, then these should be mounted on the righthand side well away from the mains socket and other high-voltage circuitry – see panel.

checks, you are ready to put the controller to use. We will examine three likely use scenarios: pool pump power saving, driving a single-phase motor with external controls and driving a 3-phase motor.

The first step is to ensure that your motor is suitable for use with a speed controller of this type – see last month's article for full details. In summary, any induction motor with a centrifugal switch is NOT suitable. Check the name-plate to ensure the motor is rated for 230V or 240V and 1.5kW (2HP) or less. 3-phase motors should be rated for 230/400V or 240/415V operation and 1.5kW or less.

Pool pump operation

In this mode, the controller operates in stand-alone mode (ie, without external controls) and is connected to the output of the pool pump timer switch.

When the pump is switched on, it ramps up to full speed, then runs the pump at full speed for 30 seconds, before ramping the pump down to a lower speed for the rest of the filtration period. When the timer switch disconnects the mains, the pump coasts to a stop, ready for the next cycle. This was explained in more detail in the previous article.

To achieve this, the controller is configured as shown in Fig.13(A). The RUN terminal is hardwired to GND,

Fig.12 (right): this front panel label should be placed behind a Perspex window which is then affixed to the case lid using silicone adhesive. It can be downloaded in PDF format from the SILICON CHIP website.

SILICON CHIP

1.5kW Induction Motor Speed Controller

(1) Suitable for use with delta-connected 3-phase induction motors and single-phase induction motors without a centrifugal switch

(2) Maximum Motor Rating: 1.5kW

(3) Maximum Mains Current: 8.7A RMS (230V)

(4) Prolonged low speed operation reduces fan cooling and may overheat the motor

WARNING

DANGEROUS VOLTAGES INSIDE DURING OPERATION & FOR SOME TIME AFTER POWER IS REMOVED

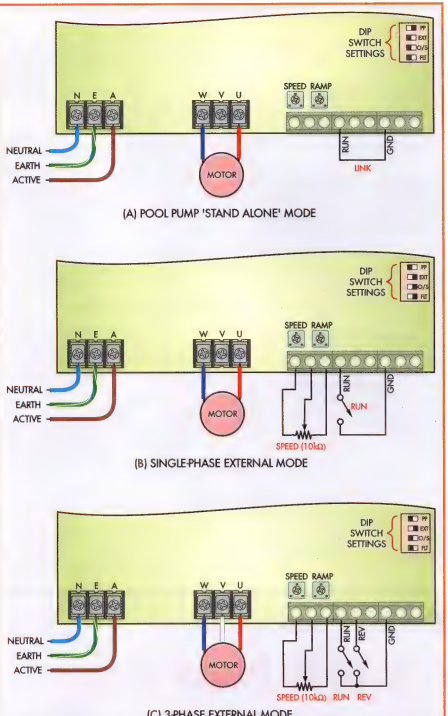

Fig.13: these diagrams show how to use the controller in single-phase stand-alone mode (A), in single-phase mode with external controls (B) and in 3-phase mode with external controls (C).

Safely Installing External Control Wiring

The wiring to any external front-panel controls (ie, speed pot & switches) should be run using 230VAC-rated cable. This wiring must not be longer than necessary to reach the controls. It must also be securely terminated at both ends and securely laced using cable ties.

This will ensure that the leads cannot possibly come adrift and contact the motor output terminals or any other high-voltage circuitry outside the isolation barrier. Provided you do this, the external controls are electrically isolated from the high-voltage components and are safe.

The controls themselves must be mounted on the side of the case near the isolated area, well away from any high-voltage components, and suitably sleeved with heatshrink insulation.

so that the motor will automatically start, and the DIP switch for pool pump (PP) mode is set to ON. The speed pot should be set for about 70% of full speed, which gives a good compromise between efficient filtration and power saving. You may need to experiment with this setting. The ramp speed is not critical – about 25% of rotation seems to work quite well.

Single-phase motor with external control

In this example, we want to run a single-phase motor with external controls. Fig.13(B) shows how it's wired.

The speed is controlled from an external potentiometer. The EXT DIP switch must be set to ON, to tell the micro to read the external pot instead of the on-board trimpot. In this case, we want to be able to run the motor at higher than rated speed, so the O/S (overspeed) DIP switch is also set to ON.

Now when the RUN switch is closed, the motor will ramp up to the speed setting of the external pot. When the RUN switch is opened, the motor will ramp down to zero.

The speed control pot and the RUN switch must be mounted on the side of the case near the isolated area.

3-phase motor operation

The final example (Fig.13(C)) is for a 3-phase motor with external controls. This is similar to the previous example. **The motor must be wired for 230V operation in delta configuration. Any 3-phase wiring should be run by a licensed electrician.**

One of the big advantages of 3-phase motors is that they can be reversed electrically. In this example, a reverse switch is connected between the REV terminal and ground. If the reverse switch is opened or closed while the motor is running, it will ramp down to zero speed, then ramp back up in the opposite direction.

Finally, we should warn against running any induction motor, single-phase or 3-phase, at low speeds for extended periods. Where fitted, the internal fan will be ineffective at low speed and so there is no cooling.

In fact, larger motors designed for speed control often have separately powered cooling fans for this reason. However, these tend to be rated over 1.5kW and thus are not suitable for use with this speed controller. SC

FANTASTIC GIFT IDEA FOR STUDENTS OF ALL AGES!

THE AMATEUR SCIENTIST

An incredible CD with over 1000 classic projects from the pages of Scientific American, covering every field of science...

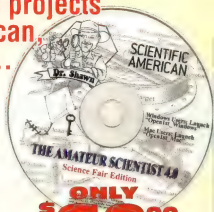

ONLY $62.00

PLUS $10 Pack and Post within Australia

NZ P&P: $AU12.00, Elsewhere: $AU18.00

THE LATEST VERSION 4 WITH EVEN MORE FEATURES!

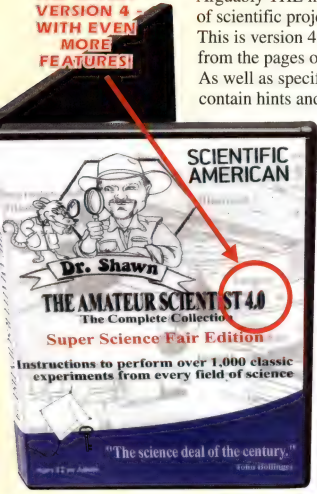

Arguably THE most IMPORTANT collection of scientific projects ever put together! This is version 4, Super Science Fair Edition from the pages of Scientific American. As well as specific project material, the CDs contain hints and tips by experienced amateur scientists, details on building science apparatus, a large database of chemicals and so much more.

"A must for every science student, science teacher, science lab . . . or simply for those with an enquiring mind . . ."

Just a tiny selection of the incredible range of projects:

- Build a seismograph to study earthquakes
- Make soap bubbles that last for months
- Monitor the health of local streams
- Preserve biological specimens
- Build a carbon dioxide laser
- Grow bacteria cultures safely at home
- Build a ripple tank to study wave phenomena
- Discover how plants grow in low gravity
- Do strange experiments with sound
- Use a hot wire to study the crystal structure of steel
- Extract and purify DNA in your kitchen
- Create a laser hologram
- Study variable stars like a pro
- Investigate vortexes in water
- Cultivate slime moulds
- Study the flight efficiency of soaring birds
- How to make an Electret
- Construct fluid lenses
- Raise butterflies as experimental animals
- Study the physics of spinning tops
- Build an apparatus for studying chaotic systems
- Detect metals in air, liquids, or solids
- Photograph an ant's brain and nervous system
- Use magnets to make fluids into solids
- Measure the metabolism of an insect . . .
- and many, many more (a thousand more, in fact!)

See the V2 review in SILICON CHIP, October 2004. . . or read on line at siliconchip.com.au

This is the ALL-NEW Version 4 . . . it's even BETTER!

HERE'S HOW TO ORDER YOUR COPY:

BY PHONE:* (02) 9939 3295, 9-5 Mon-Fri

BY FAX:# (02) 9939 2648, 24 Hours 7 Days

BY EMAIL:# silicon@siliconchip.com.au, 24 Hours 7 Days

BY PAYPAL:# PayPal silicon@siliconchip.com.au, 24 Hours 7 Days

BY MAIL:# PO Box 139, Collaroy NSW 2097

BY INTERNET:^ siliconchip.com.au, 24 Hours 7 Days

* Please have your credit card handy! # Don't forget to include your name, address, phone no and credit card details. ^ You will be prompted for required information

There's also a handy order form inside this issue.

Exclusive in Australia to: SILICON CHIP siliconchip.com.au

CIRCUIT NOTEBOOK

Interesting circuit ideas which we have checked but not built and tested. Contributions will be paid for at standard rates. All submissions should include full name, address & phone number.

PICAXE 433MHz data transmitter & receiver

This design uses a pair of PICAXE08M2 microcontrollers and low-cost 433MHz ASK transmitter and receiver modules to provide a wireless remote data monitor with LCD readout.

The transmitter comprises a PICAXE08M2 that monitors DC voltages via potentiometer VR1. The micro's internal ADC converts the DC voltage at pin 5 to a digital signal with 10-bit resolution and sends the data, along with a station identifier and checksum, to a 433MHz ASK transmitter module (Jaycar ZW-3100). The data is transmitted at 2400 baud and the period between transmissions can be set in software in one-second increments up to over 18 hours. The initial rate is 15 seconds.

During the break period, transmission is off to reduce power consumption. The transmitter and micro are powered from via two alkaline cells giving a nominal 3V. However, for accurate analog readings the DC supply should be regulated as the digital count will vary as the battery voltage changes. Standing current is of the order of 1mA and less than 10mA during the short transmission bursts.

The receiver comprises a PICAXE08M2, a 433MHz ASK receiver module (Jaycar ZW-3102), an MCP23008 I^2C port expander (available from **www.futurlec.com**) and a 2-line LCD display.

The PICAXE monitors the data from the 433MHz receiver module. When a valid data packet is received (station identified correctly and checksum correct), the LED connected to port 4 (pin 3) is flashed and the received data is processed and sent via I^2C protocol to the 8-bit I^2C port expander which interfaces to a 2-line 16 character LCD display. The display shows a text message, the data and a packet counter to confirm that all is working correctly.

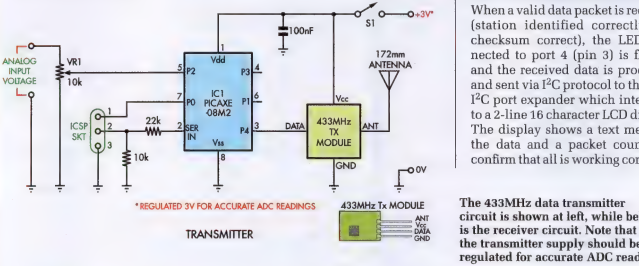

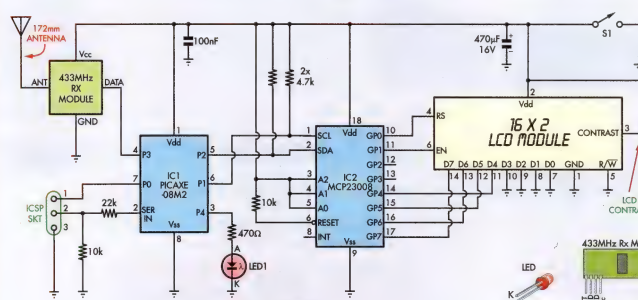

The 433MHz data transmitter circuit is shown at left, while below is the receiver circuit. Note that the transmitter supply should be regulated for accurate ADC readings.

The LCD module is operated in 4-bit mode.

The 433MHz receiver has no muting facility. Hence, during periods of no-signal, the AGC sets the gain to maximum and there is a high level of noise on the data line. To ensure reliable reception, the transmitter is switched on for a short duration to allow the receiver AGC to operate and then briefly low again with the receiver AGC still active, thus eliminating output noise before the data stream is sent.

The software can be easily modified for other purposes, for example to send text messages, water level monitoring etc. A number of transmitter and receiver pairs could operate simultaneously using different station identification and slightly different transmit periods. A PICAXE14M2 with software changes could be used in lieu of the PICAXE08M2 to avoid the need for the port expander.

The range is at least 200 metres outdoors and 25 metres indoors. As the operating frequency is in the Industrial, Scientific and Medical band that does not require licencing, other devices such as door bell, garage door and keyless car entry transmitters could interfere with operation. However, these transmitters are generally not continuous and a data packet would only be lost if one of these other units was transmitting physically close to and concurrently with the data transmission from this circuit.

Data reception reliability is high due to the use of station ID and checksum. Data security is low as the transmit packet can be monitored by others. A simple encryption routine has been implemented that would puzzle anyone who had the time and inclination to eavesdrop on the data stream.

A 3-way pin header (ICSP SKT) and two resistors provide a simple PICAXE programming interface on both the transmitter and receiver circuits.

The software (433MHz Tx-Code.bas and 433MHz Rx-Code.bas) can be downloaded from the SILICON CHIP website.

Phillip Webb,
Hope Valley, SA. ($60)

Cheap electronic ballast for fluorescent light fittings

Michael Ong is this month's winner of a $150 gift voucher from Hare & Forbes

The easiest and cheapest method to obtain an electronic ballast for a fluorescent lamp fitting is to obtain one from a compact fluorescent lamp (CFL). Tests with a salvaged electronic ballast from a defective 18W GEC CFL showed it to work well for 600mm 18W and 1200mm 36W fluorescent tubes.

In fact, compact fluorescent lamps are now so cheap that it is worth buying a new one in order to get a working electronic ballast. If you don't have any CFLs, purchase one rated at 20W or 24W (eg, Philips Tornado 24W or GE 20W).

To remove the electronic ballast from the CFL, first desolder the two terminal joints on the bayonet lamp holder. Then use a hacksaw to cut the base off the bayonet lamp holder. Use side cutters to cut off the plastic base to get access to the PCB of the electronic ballast. It can then be disconnected from the CFL tube.

You will need to mount the electronic ballast PCB securely inside your lamp fitting and well insulated, perhaps wrapped in duct tape, to avoid shorts. Connect the filaments of the fluorescent tube lamp to the four terminals of the electronic ballast.

No starter is required and switching on the fluorescent tube lamp will be virtually instantaneous, with no initial flickering. Overall power dissipation is reduced compared to a conventional ballast and the brightness from the fluorescent tube lamp will be slightly higher.

An electronic ballast salvaged from a compact fluorescent lamp.

If a Philips Tornado 24W CFL is to be used, the 6.0µF 400V Aishi electrolytic capacitor on the PCB should be replaced with a 6.8µF 400V or a 10µF 400V electrolytic capacitor as it is prone to leakage. The 3.9µF 400V electrolytic capacitor on the board of the GE 20W CFL appears to be fine.

The wrecked CFL can disposed of at the designated green bins available at shopping complexes.

Michael Ong,
Wembley, WA.

May the best contribution win!

As you can see, we pay $$$ for contributions to Circuit Notebook. But each month the **best** contribution (at the sole discretion of the editor) receives **a $150 gift voucher from Hare&Forbes Machineryhouse**. That's yours to spend at Hare&Forbes Machineryhouse as you see fit – buy some tools you've always wanted, or put it towards that big purchase you've never been able to afford! Contribute **NOW** and **WIN**! Email your contribution now to editor@siliconchip.com.au or post to PO Box 139, Collaroy NSW

HARE&FORBES MACHINERYHOUSE
ABN: 96 000 286 957
www.machineryhouse.com.au

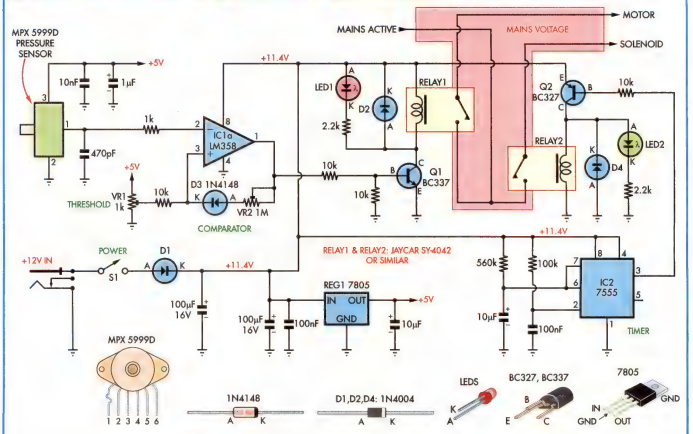

Air-compressor controller for a sand-blaster

This circuit was devised to control a large volume air compressor which is used for sand-blasting. This uses a 4kW single-phase electric motor and a solenoid valve that controls the loading and unloading of the compressor.

When starting, the compressor motor needs to be powered for a few seconds before the solenoid valve is closed. This allows the motor time to provide sufficient air pressure. In operation, the compressor needs to be controlled to provide between 95 psi (655kPa) and 100 psi (689kPa) to produce a consistent sand blast.

To do this, a Freescale MPX5999D differential pressure sensor is used to monitor the compressor's pressure. This sensor is designed to operate up to 1000kPa (150 psi) and produces a DC output of about 3.3V at 655kPa and 3.4V at 689kPa.

A modified version of the Simple Voltage Switch for Car Sensors (Silicon Chip, December 2008) is used to control the compressor motor. Switching is via RELAY1 which has contacts rated for 220VAC at 30A. A second relay (RELAY2) is controlled by a 7555 timer to provide the delay before the solenoid valve kicks in.

The output from the pressure sensor is monitored by op amp IC1a, connected as a comparator. The non-inverting input (pin 3) is connected to threshold trimpot VR1 via a 10kΩ resistor. Hysteresis is included using diode D3 and trimpot VR2. VR1 is adjusted to give about 3.3V.

When IC1a's output is high, VR2 and the 1MΩ resistor pull pin 3 slightly higher than 3.3V and VR2 should be adjusted to give 3.4V at pin 3. When IC1a's output is low, pin 3 will then be at 3.3V.

When the pressure is low, pin 1 of IC1a will be high. This drives transistor Q1 and RELAY1 to power the compressor motor. When the pressure goes above 689kPa, the comparator goes low, the relay switches off and the compressor motor stops.

IC2 is a CMOS 555 timer that provides the start-up delay. At power up, when S1 is closed, the 555 timer is triggered because the trigger (pin 2) is momentarily pulled low by a 100nF capacitor. This sets its pin 3 output high, so transistor Q2 and RELAY2 are off. Thus no power is provided for the solenoid.

The 10µF capacitor at pins 6 & 7 now begins to charge and after about 8s, pin 3 goes low and Q2 and RELAY2 turn on and turn on the solenoid valve.

Silicon Chip

Issues Getting Dog-Eared?

Keep your copies safe with our handy binders

Available Aust. only. Price: $A14.95 plus $10.00 p&p per order (includes GST). Just fill in and mail the handy order form in this issue or ring (02) 9939 3295 and quote your credit card number.

Motor protector uses missing pulse detector

This unit protects induction motors from burnout in the event that they stall or are running too slowly, as may happen if the mains voltage is low.

Two magnets are glued on opposite sides of the motor shaft and these are monitored by an adjacent Hall Effect sensor and fed to a missing pulse detector. If this detects no pulses or pulses that are too slow, it removes power from the motor.

The circuit is powered from a 12V transformer which feeds a bridge rectifier and a 2200µF capacitor. The unregulated DC is then fed to 12V regulator REG1. This powers two 555 timers (IC1 & IC2) and a 12V relay with 250VAC contacts. 5V regulator REG2 powers the Hall Effect sensor and 741 op amp IC3.

The motor is turned on by switch S1 which powers up both 555 timers. IC1 is connected as a one-shot monostable with a 5-second pulse output from its pin 3. This turns on transistor Q3 and the relay, allowing the motor to come up to speed. It also holds pin 4 (Reset) of IC2 high for this period, then swings low.

The pulses from the Hall Effect sensor are fed to op amp IC1 which is configured as a comparator. Its output drives transistor Q1 via LED1 which flashes when pulses are present. Q1 drives Q2 via a 1µF capacitor. Q2 is connected to pin 6 of IC2 which is connected as a missing pulse detector. With Q2 out of the circuit, IC2 would run as a conventional monostable, with a high output from its pin 3 until its pins 2 & 6 rise to about 9V whereupon pin 3 goes low.

With Q2 fed with pulses from the motor, it continually discharges the 2.2µF capacitor at pin 2 of IC2, preventing its pin 3 from going low. If the motor pulses are too slow or non-existent, IC2 times out, its pin 3 goes low, Q3 turns off and the relay switches off, disconnecting power from the motor. This also pulls pin 4 of IC2 low so the circuit is then disabled. The motor can only be re-started by turning off the power and then turning it on again via switch S1.

While the relay should have 250VAC contacts, it is only used to switch a 250VAC contactor with ratings to suit the motor.

An induction motor with a rated speed of 1440 RPM will generate 48Hz with two magnets installed on the shaft. VR2 will need to be adjusted so that IC2 is only triggered for low motor speeds. VR1 is adjusted so that pin 2 of IC3 is slightly above pin 3 when no magnet is near the Hall Effect sensor.

The magnets should be installed so that their south poles face the sensor.

Geoff Coppa,
Toormina, NSW. ($70)

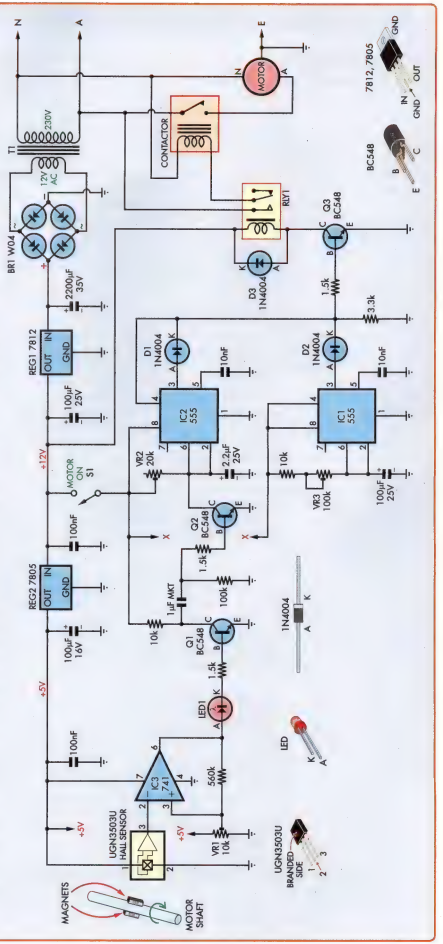

Maximite-based ultrasonic rangefinder

This circuit for an ultrasonic rangefinder is based on the Maximite Microcomputer (SILICON CHIP, March-May 2011). Many of the additional parts were salvaged from an old ultrasonic burglar alarm kit but suitable equivalents should be available. With the parts shown, the minimum sensing range is around 30mm and the maximum around 4-5m.

In brief, an ultrasonic transmitter produces a burst of high-frequency sound waves (40kHz) which then bounce off the nearest hard object in their path and return to be picked up by the receiver unit. The delay between transmission and reception indicates the distance that the sound waves travelled and thus the distance to the reflecting object.

IC1d & IC1e form an oscillator with 40kHz crystal X1. The resulting square wave is buffered by IC1b & IC1c and then fed to IC1f via a 10kΩ resistor. The output of IC1f is inverted again by IC1a and these two out-of-phase signals drive ultrasonic transmitter Tx to produce the sound waves. Because the two ends of the transmitter are driven with out-of-phase square waves, it is driven at 18V peak-to-peak.

The reflected sound waves are picked up by receiver Rx. Its output is low-pass filtered by a 1kΩ resistor and 680pF capacitor and then attenuated by VR2, which sets the sensitivity. The signal is then AC-coupled via a 680pF capacitor into IC2a, part of a CA3401 quad current feedback (Norton) amplifier.

These are like op amps but amplify current rather than voltage. External resistors convert the signal voltage into a current and then the output current back into a voltage. Here, they are used as inverting amplifiers with a gain of about 43.7 (1MΩ ÷ (27kΩ || 150kΩ)). With three stages in series, the overall gain is nearly 100dB.

Each stage works as follows. Each inputs is the base of an NPN transistor with its emitter connected to ground. So current only flows into an input when its voltage is at least one diode drop above ground (ie, about 0.6V). The current from the output is proportional to the difference between the currents flowing into the non-inverting and inverting inputs.

So with the non-inverting inputs tied to ground, current flows from the amplifier output until the voltage at the inverting input rises above 0.6V. We can then calculate the quiescent output voltage by considering the 1MΩ/150kΩ divider between the output and inverting input, ie, 0.6V x (1MΩ + 150kΩ) ÷ 150kΩ = 4.6V. This is close to half the nominal 9V supply.

When a signal is picked up by the receiver, the voltage is converted to a current by the 27kΩ resistor connecting it to the inverting input of IC2a and this current is summed with the feedback current and thus appears amplified at the pin 5 output. A 2.2pF capacitor across the 1MΩ feedback resistor reduces noise in the output by decreasing the feedback network impedance at high frequencies.

After passing through the three gain stages, the amplified signal is AC-coupled via a 10nF capacitor to a window comparator based on IC3, an LM393 dual comparator. The common output (at pins 1 & 7) goes low whenever the signal swing exceeds 4.1V peak-to-peak. The window thresholds are set at 0.45V and 4.55V by the 2.2kΩ/20kΩ/2.2kΩ voltage divider between +5V and ground. The incoming signal is biased to 2.5V by a 10kΩ resistor from the centre of the same divider.

A 4.7nF capacitor at the comparator output ensures the output pulse has a minimum duration. When IC3's open-collector output(s) switch off, it charges via a 10kΩ resistor from the 3.3V rail.

The comparator output signals the Maximite when a reflected signal is detected and also resets the RS flipflop formed by IC4a and IC4d, two CMOS NAND gates. The flipflop output controls IC4c, another NAND gate, which gates the signal from the audio output of the Maximite. This is set up to provide a 200kHz square wave.

This allows the Maximite to accurately measure the time between ultrasonic transmission and reception. The Maximite pin 10 goes low to send the signal burst, turning off NPN transistor Q1 which, when on, suppresses the 40kHz signal to the transmitter.

When pin 10 goes low it also sets the aforementioned RS flipflop, bringing pin 11 of IC4d high and thus pin 9 of IC4c also. The audio pulses at pin 8 of IC4c are then fed into the Maximite via input pin 11 which is set up to count the pulses. When the reflection is detected and the RS flipflop is reset, pin 9 of IC4c goes low and so the pulses are no longer received. The counter stops incrementing.

The Maximite senses when the flipflop is reset using its input pin 9 and it can then read the counter value to determine the delay (by multiplying the result by 5µs, ie, 1 ÷ 200kHz). This can then be used to calculate the distance the sound waves travelled.

To do this final calculation it is necessary to measure ambient temperature, as the speed of sound varies with it. This is done by 100kΩ thermistor TH1 (B=4500). TH1 forms a voltage divider with a 100kΩ resistor and this voltage is applied to analog input pin 8 of the Maximite. The Maximite uses its internal analog-to-digital converter (ADC) to measure this voltage and thus the temperature.

The computed range is displayed on a 16x2 alphanumeric LCD. VR1 allows contrast adjustment while the backlight is powered from 5V via a 36Ω current-limiting resistor. The 5V supply is provided by an LM7805 regulator (see "Measuring Short Intervals With the Maximite", Circuit Notebook, March 2012).

The unit is calibrated using S1 and S2. Place the rangefinder 0.5m away from and perpendicular to a wall. Set S1 appropriately and press S2. Then move the unit to be 3.5m from the wall, change S1 and press S2 again. The results from these measurements are stored in a file and used when calculating future range readings. S1 can then be set to the "RUN" position for normal operation.

Note that when building the unit, the leads connecting the ultrasonic transmitters and receivers should be run using shielded cable and kept as short as possible. Don't run them too close to each other and be careful with the layout and grounding of the amplification section because of its high gain.

Jack Holliday,
Nathan, Qld. ($70)

Editor's note: the CA3401 is now obsolete but "new old" stock is still available from Futurlec (**www.futurlec.com.au**).

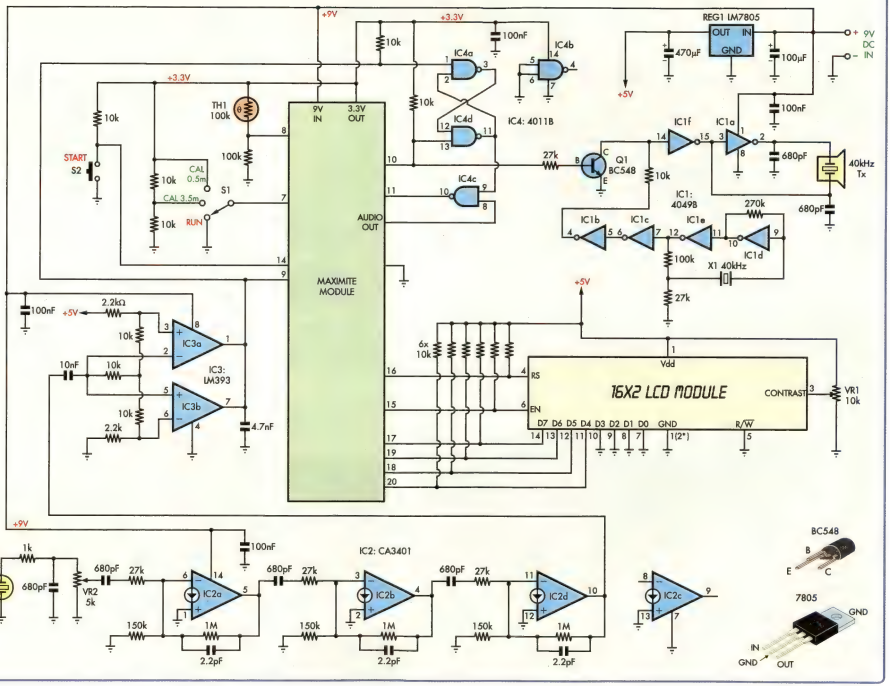
+9V
+3.3V
REG1 1M7805
OUT IN
GND
470µF
100µF
+ 9V DC IN
100nF
10k
IC4a
IC4b
IC4d
IC4c
IC4: 4011B
+5V
TH1 100k
θ
9V IN
3.3V OUT
START S2
CAL 0.5m
CAL 3.5m
RUN
S1
100k
AUDIO OUT
MAXIMITE MODULE
27k
Q1 BC548
IC1f
IC1a
680pF
40kHz Tx
IC1: 4049B
IC1b
IC1c
IC1e
IC1d
270k
100k
X1 40kHz
2.2kΩ
IC3a
IC3b
IC3: LM393
10nF
2.2k
4.7nF
6x 10k
Vdd
16X2 LCD MODULE
CONTRAST
VR1 10k
RS
EN
D7 D6 D5 D4 D3 D2 D1 D0 GND R/W
1(2*)
1k
40kHz Rx
VR2 5k
IC2a
IC2b
IC2d
IC2c
IC2: CA3401
150k
1M
2.2pF
BC548
7805
IN
GND
OUT

Building our new SemTest

Pt.3: By JIM ROWE

Now that we have looked at the full circuit of our new Discrete Semiconductor Test Set, it's time to describe its construction and the setting-up procedure. We also describe how to fit a crowbar circuit to quickly discharge the HT after making high-voltage measurements.

AS SHOWN IN the photos, the SemTest is built in an ABS enclosure measuring 222 x 146 x 55mm. Apart from VR10 (the Mosfet V_{GS} pot) and the five pushbutton switches (which mount directly on the front panel), all the components are mounted on one of two PCBs.

Both boards are double-sided, so there is no need to fit any wire links. Incidentally, our prototype photos in the February & March 2012 issues showed numerous link positions on both PCBs. These have now been incorporated into the copper patterns on the top layers of both boards so that is one less tedious task needing to be done.

The main board (coded 04103121) mounts in the bottom of the enclosure, while the display board (coded 04103122) sits behind the front panel and is spaced 18mm from it. The two boards are linked via three flat ribbon cables fitted with IDC connectors.

Rotary switch S2 is mounted on the lower PCB. Its control shaft is 42mm long, so that when the case is assembled, it passes through clearance holes in both the display PCB and the front panel.

Power switch S1 and 12V input connector CON1 are both located on the righthand end of the main board, towards the rear, and pass through holes in the righthand end of the enclosure. A small hole nearer the front of the enclosure provides access to trimpot VR2, which is used to set the micro's 2.490V reference voltage.

Six similar holes along the top edge of the righthand end of the enclosure

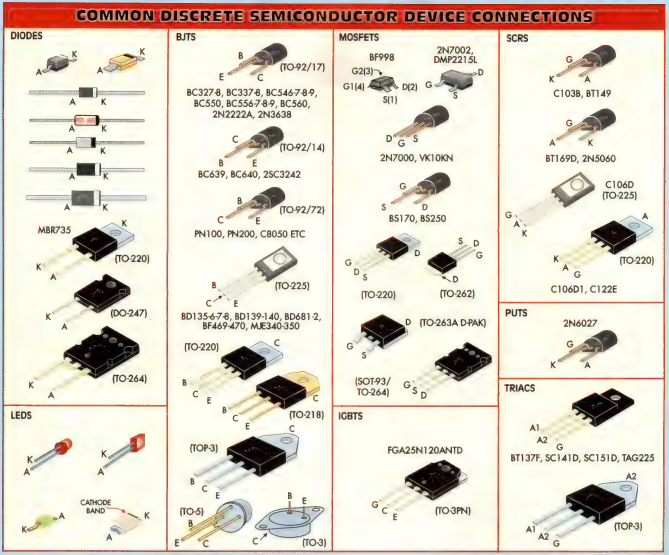

ABOVE: this handy table shows the pin connections for many discrete semiconductor devices. The ZIF socket on the front of the SemTest makes it easy to connect devices for testing.

are used to access various trimpots mounted on the righthand end of the display board.

Main PCB assembly

Use the layout diagram of Fig.10 as a guide to assembling this board.

Begin by fitting all the smaller resistors, which should be of 1% tolerance. Note that one of these resistors (which mounts about 20mm above and to the right of IC3) is marked "0Ω/68Ω", because its value depends on the type of relay you use for Relay 1. If you use a relay with a 12V coil, this resistor can be replaced with a wire link (or zero ohm resistor). With a 6V relay (eg Jaycar SY-4058), the resistor should be 68Ω.

The 1W and 5W resistors are next. Mount the 5W resistors about 1.5mm above the surface of the board, to allow some ventilation if they become hot in operation.

Follow with trimpots VR1 and VR2. VR1 (50kΩ) mounts near IC1 while VR2 is a horizontal multi-turn 10kΩ unit which mounts at lower right.

Once these are in, fit the capacitors. The two 47µF 450V electrolytics need to be laid on their sides and secured with small cable ties.

Now fit the DC input connector CON1, followed by power switch S2, DIL pin headers CON2, CON3 and CON4, the 40-pin DIL socket for IC4 and the 8-pin DIL sockets for IC1 and IC3. Relay drivers IC5 and IC6 do not need sockets and are soldered direct to the PCB later during the assembly.

The six 1mm PCB terminal pins, used for the various test points can now go in. The four relays can then be installed. Note that RLY7 and RLY8 are mini-DIL reed relays, which should be mounted with the orientation shown in Fig.10.

The next step is to wind T1, the step-up transformer for the SemTest's DC-DC converter. The winding and assembly details are shown in Fig.11; follow this exactly (or else!). Wind each layer as closely and evenly as possible; wind them all in the same direction and cover each layer with a layer of insulating tape (to both hold that layer in place and provide insulation between it and the layer above it).

Before T1 is assembled don't forget the "gap" washer, cut from a small piece of 0.06mm thick plastic sheet.

T1 can now be mounted on the main PCB. It is held in place (as well as being held together) by an M3 x 25mm long Nylon screw and nut. Note that the primary start (S), tap (T) and secondary finish (F) wires all connect to the PCB, just to the right of the transformer itself.

Semiconductors

Now for the semiconductors, start-

HT crowbar – a safety refinement

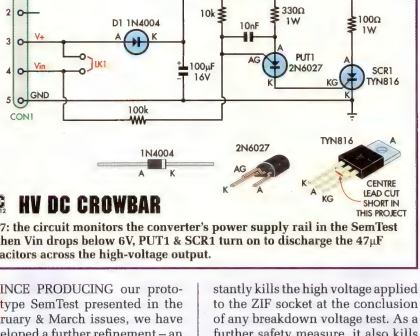

SC 032012 **HV DC CROWBAR**

Fig.7: the circuit monitors the converter's power supply rail in the SemTest & when Vin drops below 6V, PUT1 & SCR1 turn on to discharge the 47µF capacitors across the high-voltage output.

SINCE PRODUCING our prototype SemTest presented in the February & March issues, we have developed a further refinement – an add-on crowbar module which instantly kills the high voltage applied to the ZIF socket at the conclusion of any breakdown voltage test. As a further safety measure, it also kills the high voltage in the event that the SemTest is inadvertently turned off before a test has properly concluded.

This minimises the chance of the user getting a shock from the test terminals when removing the DUT or a possible breakdown of the DUT itself when the power is inadvertently removed.

The crowbar module is wired to three points on the main (lower) SemTest PCB. On our prototype, these wires have been soldered to specific component leads but the final SemTest PCB has pads for these wires.

The crowbar board senses the 11.4V supply rail to the MC34063 DC/DC converter IC1. This drops very quickly to around 6V when a test finishes or more slowly if the unit is switched off during a test. Either way, this is the trigger for the crowbar to discharge the capacitor bank from 600V to a few volts in around 20ms.

Parts List

1 PCB, code 04105121, 56 x 40.5mm (available from SILICON CHIP)
1 M3 x 6mm machine screw & nut
2 M3 shakeproof washers
1 100mm length red heavy duty mains-rated hook-up wire
1 200mm length black heavy duty mains-rated hook-up wire
1 200mm length yellow hook-up wire
1 70mm length 30mm diameter heatshrink tubing (Jaycar WH5658, Altronics W0919A)

Semiconductors
1 TYN812 SCR (SCR1; Altronics Z1778)
1 2N6027 PUT (PUT1; Jaycar ZT2397, Altronics Z1410)
1 1N4004 1A diode (D1)

Capacitors
1 100µF 16V electrolytic
1 10nF monolithic multi-layer ceramic

Resistors (0.25W, 1%)
1 100kΩ
1 10kΩ
1 330Ω 1W (5%)
1 100Ω 1W (5%)

Circuit description

Fig.7 shows the full crowbar circuit. It could potentially be used in other devices but for use with the SemTest, link LK1 is installed, to short Vin (the sense input) and V+ (its power supply) together.

The +HV and GND terminals at CON1 are connected across the SemTest's high voltage capacitor bank. Fig.8 shows a fragment of the SemTest circuit and demonstrates how the crowbar module is connected. The V+ terminal goes to pin 6 of IC1, which is at around +11.4V when the DC/DC converter is running and drops to 0V when it is switched off.

While the DC/DC converter is running, current flows from this rail, through diode D1, charging the 100µF capacitor. As this capacitor charges, the gate (AG) of programmable unijunction transistor PUT1 is pulled up too, via the 10kΩ and 100kΩ resistors. At the same time, the anode (A) is pulled up via a 330Ω resistor. The 10nF capacitor between PUT1's anode and gate is initially discharged and this helps to keep the gate at anode potential, preventing false triggering if there are any initial glitches in IC1's power supply (eg, due to relay contact bounce).

A PUT is essentially a small anode-gate SCR. While a conventional SCR is turned on when its gate is pulled above its cathode, a PUT turns on when its gate is pulled below its anode, sinking current from the gate. Both SCRs and PUTs remain on once triggered until their anode-cathode current flow drops below the "holding" current, in this case much less than a milliamp.

As long as V+/Vin are held at around 11.4V, the crowbar circuit remains deactivated. But once Vin drops precipitously, the 10nF capacitor begins to charge while the 100µF capacitor retains its charge, by virtue of diode D1.

Once Vin drops below the ~6V threshold, sufficient current flows from PUT1's gate to trigger it on. It then dumps the charge in the 100µF capacitor into SCR1's gate (KG), via the 330Ω current-limiting resistor. This happens in less than 100µs if Vin drops fast, as when a test ends normally.

The 330Ω resistor limits the current into SCR1's gate to around 25-

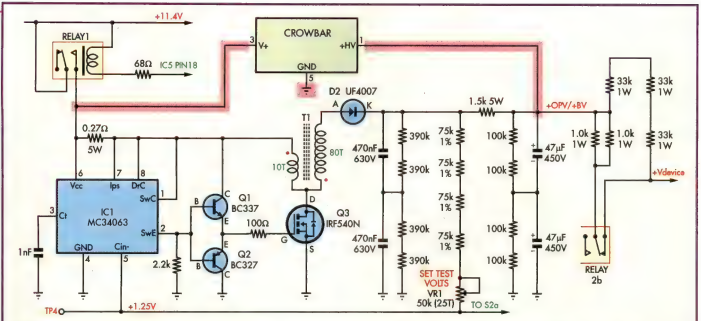

Fig.8: this diagram shows how the HV Crowbar module is connected to the SemTest circuit. Only three connections are required, as indicated by the lines highlighted in red.

30mA, enough to trigger it reliably. SCR1 then rapidly discharges the high voltage capacitor bank through the 100Ω resistor. The peak discharge current is 600V ÷ 100Ω = 6A.

PUT1 switches off as soon as it has finished dumping the charge of the 100µF cap into SCR1's gate. But SCR1 stays on until the current through it drops below 40mA (its holding current) so the capacitor bank discharges to around 4V.

The specified TYN816 SCR is rated for 800V & 16A. Do not use an SCR with lower ratings.

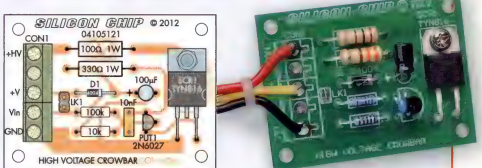

Fig.9: follow this layout diagram and photo to build the HV Crowbar. For the SemTest, leave out the screw terminal block and install a wire link for LK1.

Construction and testing

Refer to the overlay diagram, Fig.9. Fit the two small resistors first, followed by diode D1, with its cathode stripe towards the right side of the board. Use a lead off-cut for LK1 and solder it in place. Then install the two 1W resistors.

Wiggle the middle lead of SCR1 back and forth until it snaps off. If there is any lead remaining, remove it with side-cutters. Bend the remaining two leads down and insert them through the holes on the PCB, then use the machine screw to attach the tab with a shakeproof washer both under the screw head and under the nut. Do it up tightly since the screw conducts the current when the crowbar activates. Then solder the two pins.

Fit the 10nF capacitor and then PUT1, bending its leads out with pliers to suit the pad spacing. Push it down as far as it will go before soldering and trimming the leads. Then mount the 100µF capacitor, with its longer (positive) lead towards the left side of the PCB. Bend its leads so that it lays down flat on the board before soldering them.

Don't fit a terminal block for CON1 since we have limited clearance to fit the unit into the SemTest. Instead, solder a red wire to HV, a yellow wire to V+ and a black wire to 0V. Make sure there are no stray copper strands.

Wire the unit up to the SemTest as shown in the main overlay diagram (Fig.10). Trim each lead so that you don't have a lot of extra length. The photos show the best place to fit it.

Once it's wired up, slip the crowbar module into the heatshrink tubing and apply gentle heat. Make sure there is no exposed metal when you are finished. Some silicone sealant can then be used to hold the unit in place, so it doesn't rattle around inside the case.

Once the SemTest unit itself is complete, the HV crowbar must now be tested for correct operation, as described in the main article.

ing with the diodes and zener diodes. Make sure that these are all installed the correct way around. The same goes for transistors Q1 & Q2. Make sure Q1 is a BC337 and Q2 is a BC327. Note that IC7, the metering voltage reference IC, is in the same TO-92 package as Q1 and Q2 – be careful not to install it in the wrong position.

Two devices come in TO-220 packages – REG1, the 7805 5V regulator and Q3, the IRF540N switching Mosfet.

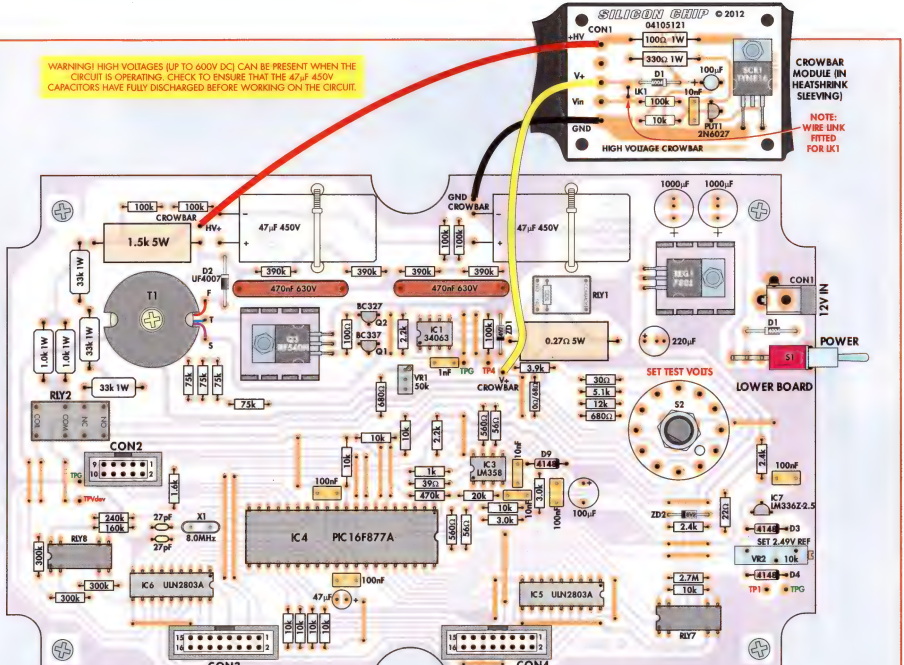

Fig.10: follow this parts layout diagram to build the main (lower) PCB assembly. Use a socket for IC4 and take care to ensure that all semiconductors and electrolytic capacitors are correctly orientated. Take care also when installing the three IDC headers – they must go in with their key-way slots positioned as shown. The two switches are mounted directly on the PCB but be sure to use the specified switch for rotary switch S2 to ensure that its control shaft is long enough (see text and panel).

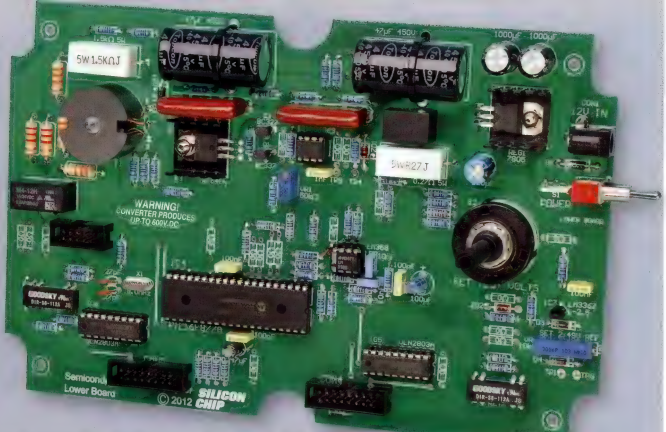

The view shows the completed main board assembly before the HV crowbar module is added. It carries the PIC microcontroller (IC4), the power supply components and the test voltage selector switch (S2).

Both are mounted with their leads bent down by 90° at a distance of 6mm from their bodies, so they pass down through the corresponding holes in the board to be soldered. Both devices are mounted on standard 19mm-square U-shaped heatsinks and secured using M3 x 10mm machine screws and nuts.

Having installed the semiconductors, install crystal X1. It's mounted just to the left of IC4's socket. That done, install the 3-pole 4-position rotary switch. **This switch must have a 42mm long shaft and the one to use is a metric switch made by Lorlin (CK1051). We sourced ours from Element14 (Cat. 112-3697).**

IC5 & IC6 can then be soldered in place and IC1, IC3 & IC4 plugged into their respective sockets. The main PCB assembly can then be completed by wiring the HV crowbar PCB to it, as shown in Fig.10

Display PCB assembly

Fig.12 is the component overlay for this PCB. Begin by fitting the resistors. As before, two of these are shown with a value of 0Ω/68Ω, to suit 6V or 12V mini SPDT relays: with a 6V relay, use a 68Ω resistor; for a 12V relay, use a wire link.

The seven trimpots can now go in. VR11 is a 10kΩ mini horizontal type near relay RLY3. The remaining six multi-turn trimpots have values of 5kΩ and 10kΩ; don't mix them up.

VR10, the 10kΩ dual-gang pot, is wired with short flying leads and will be bolted to the front panel later. Note that it should have its shaft cut to 15mm long, to suit the knob.

Follow with the two capacitors and the relays. Make sure the two mini-DIL reed relays are correctly orientated, as you would for DIL ICs.

Now fit the semiconductors. There are four TO-92 devices: transistors Q4 & Q5 and voltage references IC8 & IC9; don't

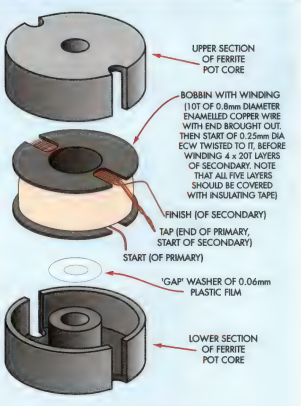

Fig.11: here are the winding details for the step-up transformer (T1) on the main PCB. Note the "gap" washer which is cut from 0.06mm plastic sheet.

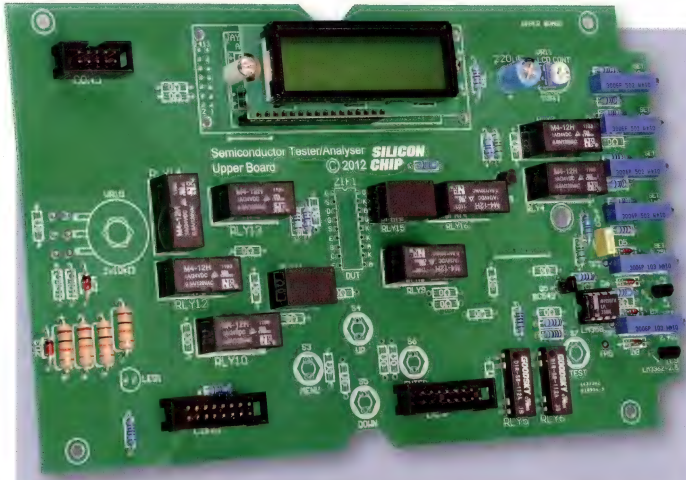

This view shows the assembled display PCB with the ZIF socket and potentiometer VR10 removed for clarity. Note that this is a prototype board and there are some differences between this and the final version depicted in Fig.12.

mix them up. Don't fit LED1 at this stage; do it just before the display PCB is attached to the front panel.

The three DIL pin headers CON5, CON6 and CON7 are next, followed by the 8-pin DIL socket for IC2. Then fit the four PCB terminal pins near IC2.

Next comes the ZIF socket. It's not mounted directly on the board but needs to be "jacked up" so that it will protrude through the matching hole in the front panel. The ZIF socket also needs to clear the front panel by almost 8mm, to allow its actuator lever to swing down into the horizontal position.

Fig.13 shows how two 18-pin DIL sockets, piggy-backed together, are used to mount the ZIF socket. Most of the "jacking up" is done by an 18-pin DIL IC socket with long wire-wrap tails. However, because the machined clips of this type of socket are not able to accept the rectangular pins of the ZIF socket, we have to use a "production" type 18-pin DIL socket (having bent sheet metal clips) between the two, as an adaptor.

The ZIF socket is plugged into this intermediate socket first and the two are then plugged into the machined-clip socket. After this the 3-socket assembly is held together using fillets of epoxy adhesive – see Fig.13.

When the epoxy cement has cured you can fit the whole ZIF socket assembly to the display PCB. Note that the assembly should be installed with the actuator lever towards the LCD module position on the PCB.

Make sure also that the bottom of the ZIF socket itself is exactly 18mm (or 19.5mm if you are using a PCB front panel) above the top surface of the PCB before you solder the 18 wire-wrap pins of the bottom socket to the pads on the PCB.

You can ensure this by using an 18mm-wide strip of stout cardboard underneath the assembly as a temporary spacer. It's best to initially tack-solder one pin at either end, then do a final check of the spacing and vertical positioning. This will allow you to make any last-minute adjustments that may be necessary before soldering the remaining 16 pins.

The next step is to mount the LCD module – see Fig.14. The connections between this module and the PCB are made via a 16-way section of SIL pin header strip, which should be fitted to the PCB (long pin sides uppermost) before the module is attached. Don't solder its pins at this stage, though.

The module itself is mounted on the PCB on two M3 x 6mm tapped Nylon spacers. These are secured using M3 x 15mm machine screws which pass up from under the board, with a flat Nylon flat washer under each screw head. The LCD module is then carefully slipped down over the screws, with the SIL strip pins passing up through the matching holes at bottom left.

M3 nuts are then fitted to the top ends of the screws to fasten the module in position, after which the bottom ends of the SIL strip pins are soldered to the display PCB pads underneath. Finally, their top ends are soldered to the pads on the top of the LCD module.

Use a fine-tipped iron for this job and solder as quickly as possible to prevent heat damage.

Once the LCD module is in position, fit LED1 to the display board. It's

mounted at lower left, with its cathode flat side to the left. At this stage just tack-solder its leads temporarily to the board pads, with the lower surface of the LED body about 16mm above the board. This will enable you to adjust its final height above the board after it's attached to the front panel.

Now plug IC2 into its socket at lower right. That completes the assembly of this board.

Making the ribbon cables

The details of these are shown in Fig.15. The two 16-way cables are cut from 120mm lengths of ribbon, with 15mm at each end to loop through the top of the IDC connector, leaving approximately 90mm of ribbon between the connectors.

The 10-way cable is made from a 190mm length of ribbon, with 15mm again used at each end for the connector loops. This leaves approximately 160mm of cable between the connectors. When you're fitting the IDC connectors to each end of the cables, make sure you fit them with the orientation as shown in the circled details in Fig.15.

Preparing the case

If you are building the SemTest from a kit, the case will probably be already laser-cut and screen printed. If you are working from scratch, you will need to download the drilling/cutting diagrams from the April 2012 downloads section of the SILICON CHIP website and print these out to use as drilling templates.

Take care when you are cutting the rectangular holes in the lid of the case for the ZIF socket and the LCD window because any curved or out-of-square edges will be painfully obvious when your SemTest is finished. The best approach is to first drill a series of 2.5mm holes around the inside perimeter of each rectangle and then use small jeweller's files to complete the job.

The easiest way to prepare the six notch holes along the upper edge of the righthand side of the case (and the matching edge of that end of the lid) is to first temporarily fit the lid to the case. You can then drill the holes in both at the same time, using a 2mm drill to first make pilot holes and then enlarging these holes with a 4mm drill.

Front panel

If you are working from a kit, the lid is likely to be already screen-printed with the label. If not, you can purchase a PCB dress panel from SILICON CHIP. It is secured to the front panel with the same screws which mount the display PCB.

Cut a 70 x 25mm rectangle of clear plastic sheet and fasten this to the lid, behind the 51 x 16mm rectangular cut-out for the LCD viewing window. This will protect the LCD from dust and moisture. The plastic sheet can be fastened to the underside of the lid using cellulose tape around its edges.

Now mount pushbutton switches S3-S7 on the front panel. That done, fit the four M3 x 25mm machine screws which ultimately attach the front PCB to the rear of the front panel.

As shown in Fig.14, each screw

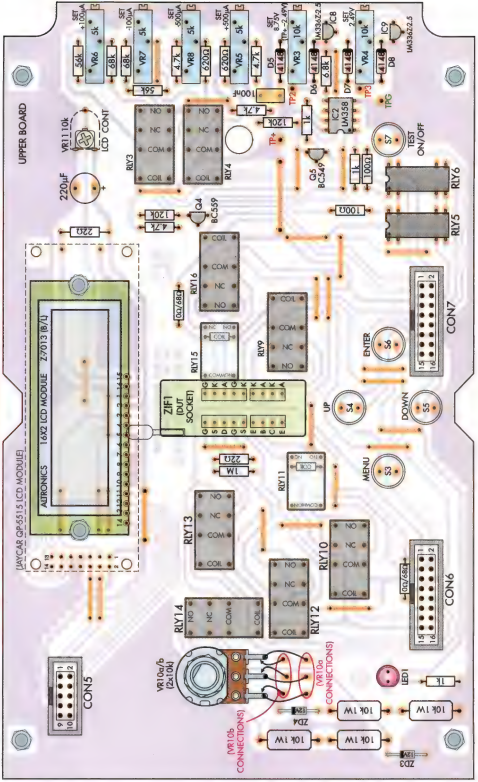

Fig.12: the display (top) PCB assembly. This PCB carries the ZIF socket, the LCD and most of the relays and is connected to the main board via IDC cables.

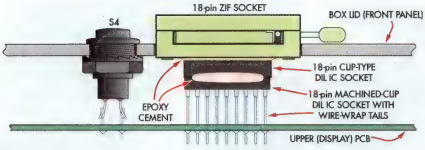

Fig.13: the ZIF socket is mounted via two 18-pin IC sockets, with the parts piggy-backed together and secured using epoxy cement before the assembly is installed (see text). Note that the bottom of the ZIF socket should be 18mm above the display PCB (or 19.5mm if you are using a PCB front panel).

is fitted with an M3 x 15mm tapped spacer. The screws and spacers should be tightened as securely as you can, without causing the screw head to distort the dress front panel. An M3 nut is then added to each screw at the end of each spacer to bring the effective spacer length close to 18mm.

Next, solder "extension wires" to the connection lugs on pushbutton switches S3-S7. The extension wires for these switches should all be made from 0.5mm diameter tinned copper wire, with their lengths staggered between about 40mm and 60mm as this will make it easier to later pass them through their matching holes in the upper PCB.

You now need to solder some short flying leads (about 50mm long) to the terminals of dual-gang potentiometer VR10. The other ends of these leads can then be soldered to the PCB as shown in Fig.12.

That done, temporarily stick the back of the pot to the display board with its shaft sticking up, ready to pass through the front panel. You can use some BluTac or double-sided tape for this job.

The three IDC cables should now be plugged into CON5, CON6 & CON7. The next operation is a bit tricky, because you have to dress each of the extension wires from switches S3-S7 so they all go through their respective holes in the display PCB as it is moved up towards the rear of the front panel. You also have to pass the body of the ZIF socket (with its actuator lever vertical) up through its cut-out in the panel, and make sure that LED1 and VR10 are lined up to pass through their clearance holes in the front panel.

When you have managed to mate the two together, with the PCB fitted onto the ends of the four mounting screws, you can add a further nut to each screw to hold it all together. Tighten each nut to complete the job.

Once it's in position, solder all of extension wires from switches S3-S7 to their pads on the underside of the PCB. Be sure to trim the excess leads after the wires are soldered.

The main board can now be mounted in the case but don't fit the lid/upper board assembly to the case just yet. It can be stood up near-vertically just in front of the case, with the front panel buttons and LCD display quite accessible.

Now plug the free ends of the three ribbon cables into CON2, CON3 and CON4 on the main board. The unit is now ready for testing.

Setting up

Be careful when testing this device, as high voltages (up to 600V DC) can be present on both PCBs (see panel).

Start by setting the voltage selector switch S2 to its 50V position, then connect the SemTest to a 12V DC plugpack rated at 900mA or more and turn on power switch S1. There should be no test devices plugged into the ZIF socket as yet. You should see this initial greeting message in the LCD window:

SC Discrete Semi conductor Tester

which should be replaced after a couple of seconds with this message:

Press Menu Select button to begin:

If you only see a clear window or two lines of 16 black rectangles, it probably means that the contrast trimpot VR11 needs adjustment. Adjust VR11 in one direction or the other until you see the messages displayed clearly and with good contrast.

Once this has been done, you can use your DMM to check the voltages at the input and output pins of REG1 (at upper right on the main board, just to the left of CON1). With the DMM's negative lead connected to the TPG pin just below D4 on the same PCB, you should get a reading of about 11.4V on REG1's upper input pin and a reading very close to 5.00V at its lower output pin.

Finishing the set-up

Your SemTest is now ready for the final setting-up adjustments. Do the adjustments in this order:

- Adjust trimpot VR2, at lower right on the main board, to set the PIC mi-

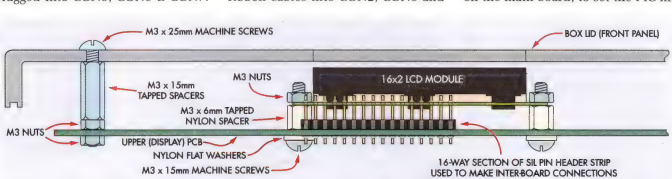

Fig.14: this diagram shows the mounting arrangement for the LCD module. It's mounted on four M3 x 6mm tapped Nylon spacers, with the holes along one edge mating with the pins of a 16-pin SIL header strip that's soldered to the display PCB. Secure the LCD module in place before soldering it to the header pins along the top. The PCB itself is mounted on the box lid using M3 x 15mm spacers, with M3 nuts used to provide additional spacing.

cro's ADC reference voltage to 2.490V. It's adjusted while monitoring the reference voltage with your DMM, across terminal pins TP1 and TPG, just below D4. This calibrates the SemTest ADC module's voltage and current measurement ranges.

- Adjust trimpots VR3 and VR4, at lower right on the display board. VR3 sets the voltage drop across IC8 to 2.490V, while VR4 is used to set the drop across IC9 to the same figure. IC8 is the voltage reference for the $+I_{BIAS}$ current source, while IC9 does the same job for the $-I_{BIAS}$ current source.

To do this, connect the DMM leads between TP+ (+) and TP2 (-) and adjust VR3 to get a reading of 2.490V. VR4 is adjusted while monitoring the voltage between test point pins TP3 (+) and TPG (-) with your DMM, again to get a reading of 2.490V.

These adjustments effectively set the lowest current level (20µA) for $+I_{BIAS}$ and $-I_{BIAS}$.

The next four set-up adjustments set the higher current settings for $+I_{BIAS}$ and $-I_{BIAS}$, using VR5, VR6, VR7 & VR8. To do these adjustments, you need to fit two short lengths of hookup wire into two of the device lead positions on the ZIF socket, and then set up the SemTest for four different device tests. Here's the procedure:

- Take two short lengths of insulated wire with about 15mm of insulation at each end stripped off. Then with the ZIF socket's actuator lever upright, introduce one end of each wire into the socket's "B" and "E" lead holes for a BJT. (It doesn't matter which of the two "E" holes you use).
- Push the socket's actuator lever down into the horizontal position, to lock these temporary base and emitter leads in place.
- Switch your DMM to read low DC current levels (say 200µA to begin) and connect its test leads to the two wire leads: the "+" lead to the base wire and the "-" lead to the emitter wire.

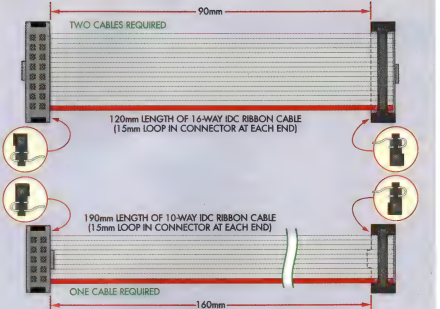

Fig.15: here's how to make up the IDC cables. Be sure to orientate the headers with the locating spigots facing exactly as shown – they face outwards on the 90mm cables and inwards on the 190mm cables.

Now we need to negotiate SemTest's menu system to reach a device test set-up which will allow us to measure the various I_{BIAS} levels using the DMM. Apply power and press the MENU SELECT button for half a second or so. You should then see the opening device selection display:

Device to Test: ∧
1:Diode/Zener ∨

In case you're wondering, those "∧" and "∨" symbols at the right-hand ends of the lines are meant to remind you that you can scroll up or down through a sequence of menu choices, using the UP or DOWN buttons.

For the first of these I_{BIAS} adjustments, we actually want to select some BJT (NPN) tests, so press either of these buttons briefly a number of times, until you see this display:

Device to Test: ∧
3:NPN bipolar ∨

Since that's the type of device we want to set up for (even though there is no actual device plugged into the ZIF socket), confirm this by pressing the ENTER button. This will cause the display to change into:

Test parameter:∧
BVcbo (e o/c) ∨

As before, note the symbols at far right on the display, indicating as before that other tests can be selected using the UP and DOWN buttons. So press either of these buttons briefly a few times until you see this display:

Test parameter:∧
hFE (Ib=20µA) ∨

This is the first test we want to set up for in order to make these set-up adjustments, so press the ENTER button to confirm it. The display will then become:

NPN bipolar:
hFE(Ib20µA)=0000

Now, after checking that you have set voltage selector switch S2 to its 50V position, press the TEST ON/OFF button to turn on the DC-DC converter and take a measurement. LED1 should be on, to indicate that the DC-DC converter is operating and providing test

WARNING: SHOCK HAZARD!

The DC-DC step-up converter used in this project can generate high voltages (up to 600V DC) and can also supply significant current. As a result, it's capable of delivering a nasty electric shock and there are some situations where such a shock could be potentially lethal.

For this reason, DO NOT touch any part of the circuit while it is operating, particularly around transformer T1, diode D1 and the two 47µF 450V electrolytic capacitors on the main (lower) PCB. Note, however, that high voltages can also be applied to the display board (via CON6) during operation, so it's not safe to touch certain parts on this board either. Exercise caution if testing the unit with the lid opened and always allow time for the 47µF capacitors to discharge before working on the circuit.

Note also that high voltages (up to 600V DC) can be present on the component leads when testing for high-voltage breakdown. DO NOT touch any leads while testing is in progress.

Sourcing The Rotary Switch

As mentioned in the article, the 3-pole 4-position rotary switch (S2) must have a 42mm-long control shaft, so that when the case is assembled, it passes through the clearance holes in the front panel with enough length left over to attach the control knob.

A Lorlin CK1051 switch is suitable and this can be sourced from Element14 (Cat. 112-3697). Note that the shafts on the switches usually available from the kit suppliers will be too short for this project.

voltage. The LCD display will also change, but don't take much notice of the h_{FE} reading because there is no transistor connected at present (it will probably show an h_{FE} reading of either "00" or "01").

Your DMM should now show a figure very close to 20.0μA (the default/lowest I_{BIAS} level).

Now press the TEST ON/OFF button again, and hold it down for a second or so until LED1 goes out, indicating that the DC-DC converter has been turned off. The LCD display will also return to its "Press MenuSelect" message, ready for another test. And when you press the MENU SELECT button, you'll find that the SemTest has "remembered" that you were testing an NPN bipolar device and will offer the same device test again:

Device to Test:^
3:NPN bipolar v

Confirm this by pressing the ENTER button. Then use either the UP or DOWN buttons until you get this display:

Test parameter:^
hFE (Ib=100μA) v

Press the ENTER button to confirm and finally press the TEST ON/OFF button again to turn on the DC-DC converter and take a measurement. As before though, don't worry about the h_{FE} measurement on the LCD display – pay attention to what the DMM is showing, because this will be reading the actual bias current. This should be close to 100.0μA. Now adjust VR6 with a small screwdriver until it reads 100.0μA.

Once that's done, press and hold down the TEST ON/OFF button until LED1 goes off. Then press the MENU SELECT and ENTER buttons and then UP or DOWN to get:

Test parameter:^
hFE (Ib=500μA) v

Press ENTER to confirm, set your DMM is set to read to over 500μA, then press the TEST ON/OFF button. Your DMM should now read close to 500μA. Adjust VR5 to get that exact figure. Press the TEST ON/OFF button once again until LED1 goes off.

That completes the two adjustments for the $+I_{BIAS}$ current levels. Those for the $-I_{BIAS}$ levels are next on the list. This time we use the tests for an PNP bipolar instead of an NPN and we need to reverse the connections to the DMM test leads.

Press MENU SELECT again and then press the UP button once, to get:

Device to Test:^
4:PNP bipolar v

Press ENTER to confirm and press either UP or DOWN to select the "h_{FE} (I_B=20μA)" test. Press ENTER to confirm and then press TEST ON/OFF. Your DMM should show close to 20.0μA, confirming the default/lowest $-I_{BIAS}$ level. Now press and hold down TEST ON/OFF to stop this test.

Now press MENU SELECT again and you'll find that the PNP bipolar tests are still being offered. Press ENTER to confirm and then the UP or DOWN buttons until you get:

Test parameter:^
hFE (Ib=100μA) v

Confirm this by pressing ENTER and follow by pressing TEST ON/OFF to start the test. Your DMM should now be reading close to 100.0μA. Adjust trimpot VR7 to bring the reading as close as possible to that figure, then press TEST ON/OFF to stop the test.

Set the DMM to read more than 500μA and then press MENU SELECT, ENTER and the UP or DOWN buttons until you have selected:

Test parameter:^
hFE (Ib=500μA) v

Press ENTER and TEST ON/OFF again and confirm that the DMM reads close to 500μA. Adjust VR8 to obtain that exact figure, then press TEST ON/OFF again and you have completed all the setting-up adjustments for the SemTest's I_{BIAS} current levels.

One more adjustment remains: using trimpot VR1 to set the DC-DC converter output voltage levels. To do this, check that S2 is set to 50V. Then press MENU SELECT and UP or DOWN until you get:

Device to Test:^
7:SCR v

Press ENTER to confirm and either UP or DOWN until you get:

Test parameter:^
Vak on (OPV) v

Now press ENTER and TEST ON/OFF. The second line of the LCD should now read something like this:

Vak(OPV) = 49.6V

Adjust VR1 (just above the centre of the main board) until the LCD reading changes to:

Vak(OPV) = 50.0V

Finally, press the TEST ON/OFF button once. This completes all the set-up adjustments.

Final assembly

The front panel assembly can now be lowered down onto the case. Make sure that the three ribbon cables are folded neatly into the space above the lower PCB and not caught between the edges of the case or lid. Fasten the case together with four M4 screws into the corner holes, then fit the knobs to the rotary switch and the pot and the assembly is complete.

Testing the HV crowbar

It's now necessary to check that the HV crowbar circuit is working correctly. To do this, power up the unit, wait a few seconds and then press the Menu Select button. You will get a display like this:

Device to Test: ^
1:Diode/Zener v

Press Enter and then the Up button. The display will then show:

Test parameter:^
Irev(OPV) v

Press Enter again. Set the Device Operating Voltage to 25V, using the right-hand knob. Then press the Test On/Off button to start the test.

Now carefully measure the voltage across the top and bottom A & K terminals in the Diodes & LEDs section of the test socket. You should get a reading close to 25V. If it's much lower (say, 12V) then either the crowbar circuit has triggered prematurely or there is a fault in the DC/DC converter circuit. You will need to switch off, open up the unit and check the crowbar and converter circuits for faults such as incorrectly orientated components.

If you get a much higher reading than 25V, there is a problem with the DC/DC converter section. Switch off and measure the voltage across the A & K terminals until it drops to a safe level. Then open the unit up and look for the source of the problem.

Assuming all is well, press the Test

On/Off button to terminate the test. You can now do a high-voltage test. The procedure is similar to before except you want to do an $I_{REV}(BV)$ test. So when you get to this stage:

Device to Test: ^
1:Diode/Zener v

press enter twice and start the test. Carefully measure the voltage across the A & K terminals again. It should be several hundred volts and it will rise to close to 600V after a number of seconds. Now press the Test On/Off button again to terminate the test while monitoring the voltage between the A & K terminals. It should immediately fall to just a few volts when the test is terminated.

If it remains high and only decreases slowly, the crowbar has failed to operate and you will need to wait for the capacitors to discharge before opening the unit up and checking for faults.

If the crowbar is not working (eg, if it fails), a warning will be displayed on the LCD immediately after performing a high-voltage test. This indicates that there is still a high voltage present at the test socket. If you get this warning then you should open the unit up and repair the crowbar circuit.

This view inside the completed prototype shows how it all goes together. The two PCB assemblies are mounted in their respective case halves on spacers and joined together via the three IDC header cables.

Using the SemTest

The SemTest is used as follows:

STEP 1: place DUT in ZIF socket and switch on.
STEP 2: Press Menu Select.
STEP 3: Use Up/Down buttons to select device type and press Enter.
STEP 4: Use Up/Down buttons to select test and press Enter.
STEP 5: For OPV tests, use righthand knob to select test voltage.
STEP 6: Press Test On/Off to start test (red LED on) and read off result.
STEP 7: Press Test On/Off again to finish test (red LED out).
STEP 8: check that the red LED is out and that there is no high voltage warning on the LCD before removing DUT.

Exercise caution when testing components for high-voltage breakdown. Up to 600V DC is present on the device leads during such tests, so be careful not to touch them!

The biggest problem in using the SemTest is knowing the various lead configurations of the devices it can test. To that end, we have prepared a connections chart showing commonly used diodes, LEDs, BJTs, Mosfets, SCRs and PUTs. It can be stuck on a wall or to the underside of the SemTest case for easy reference.

For less common devices, you'll need to look up the connections in a data book or by downloading a data sheet from the manufacturer's website.

Finally, here are a few tips to guide you when you're doing some of the more specific tests:

- When reading the forward voltage drop V_F of a diode or LED or the voltage drop V_{AK} of an SCR when it's conducting, be aware that the accuracy of this measurement is not very high due to measuring circuit limitations. So if you need to make really accurate measurements of V_F or V_{AK}, you'll need to use an external DMM with its leads connected across the device's "A" and "K" leads.

Remember that during the same tests, it's OK to increase the device operating voltage to a higher setting in order to see the voltage drop at higher current levels.

- When you want to measure the h_{FE} of a BJT, start on the setting with the lowest I_{BIAS} level (ie, 20µA), because this is the setting with the highest h_{FE} range. Only swing down to one of the higher I_{BIAS} settings if the h_{FE} reading you get is very low (ie, below 300).

This should only be necessary with medium-to-higher power devices, which often have their "peak" h_{FE} at higher currents.

- When you want to measure the I_{DS} vs V_{GS} characteristic of a Mosfet to get an idea of its transconductance or "gm", start by selecting the highest device operating voltage which will not exceed the device's V_{DS} ratings. That's because the V_{GS} bias voltage (adjusted via VR10) is derived from the actual device operating voltage, which inevitably tends to drop once the device begins to draw drain-source current (due to voltage drop in the current limiting resistors).

If you don't set the switch for a reasonably high voltage to start with, you'll find that it won't be possible to provide much V_{GS} once the device starts to conduct.

Actually, although you need to set the operating voltage within the device ratings when you start this test, it's OK to increase the setting to 100V during the test itself, if you need to do so in order to achieve a higher V_{GS}.

This won't cause any problems if you only increase the voltage setting once the device is conducting. SC

Ultra-LD Mk.3 Amplifier Tweaks & Performance

By NICHOLAS VINEN

Finally, we present the specifications for the new Ultra-LD Mk.3 Amplifier along with a couple of minor tweaks to the design to maximise its performance.

THESE FIGURES and graphs show the performance of the complete Ultra-LD Mk.3 amplifier. The test signal source was set to 2V RMS and connected via the RCA inputs of channel 1 on the rear panel of the unit. The performance was measured at the speaker terminals on the rear of the unit, with a resistive load connected via 1m of twin lead. The volume control was set to deliver 100W into 8Ω and 200W into 4Ω with the 2V RMS input signal.

The overall performance of this amplifier is much better than the vast majority of commercial amplifiers, even expensive models sold as "high fidelity". Distortion figures for commercial units are often quite vague; those that do provide graphs typically show quite a dramatic rise in distortion above 1kHz. As you can see from the graphs published here, our Ultra-LD Mk.3 retains the low high-frequency distortion characteristics of the individual modules featured in the July 2011 issue.. The signal-to-noise ratio is also very good.

The left/right channel performance differs, despite the fact that the amplifier modules are identical. This is because one module is closer to the power transformer than the other; we purposefully arranged it this way because otherwise, the transformer would be close to the sensitive input circuitry of the right-hand module and that would be worse.

Specifications

Continuous power, both channels driven (THD+N < 0.1%): 100W into 8Ω; 135W into 4Ω

Music power, both channels driven: ~150W into 8Ω; ~200W into 4Ω

Total harmonic distortion plus noise: <0.0025%, 1kHz, 20Hz-22kHz bandwidth, 90W (both channels driven)

Signal-to-noise ratio: -109dB (left channel), -115dB (right channel) with respect to 90W into 8Ω

Frequency response: +0,-0.3dB (8Ω), +0,-1.3dB (4Ω) 20Hz-20kHz

Channel separation: approximately 50dB, 4Ω and 8Ω, both channels

The performance of the right channel is almost as good as that of the module by itself, with very low distortion up to 20kHz – see the red and mauve traces in Fig.6. This graph was produced using a wide analyser bandwidth of 20Hz-80kHz, so that it includes the first and second harmonics of the higher frequency test signals. Despite this, distortion is down around 0.001% at 1kHz and below 0.004% at 20kHz.

The left channel results are slightly worse for the reasons explained earlier, but still very good. The higher distortion for the left channel with both channels driven is due to the increased magnetic field around the transformer as it delivers nearly twice the current.

Channel separation is virtually flat with frequency and insensitive to load impedance at -50dB.

Further refinements

We made a couple of additional refinements to the amplifier design in order to achieve this level of performance, not described in the previous articles. Both changes reduce the amount of ripple from the power supply that couples into the signal earth.

First, we changed the 10Ω 0.25W

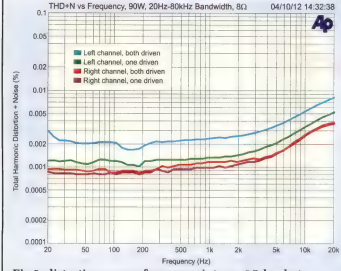

Fig.6: distortion versus frequency into an 8Ω load at 90W per channel. The right channel has lower distortion than the left channel due to its proximity to the mains transformer and the hum/buzz coupling that results. Measurements with a 400Hz high-pass filter show the performance of the two channels is virtually identical if hum is ignored.

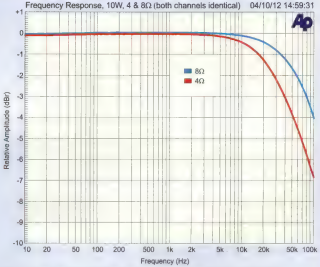

Fig.7: frequency response of the complete amplifier which is virtually flat from 20Hz to 20kHz. Very little bass roll-off is evident. The high-frequency roll-off is due to the output RLC filter, which is necessary to isolate the amplifier from the speakers and cabling, ensuring stability. As a result, the 4Ω high-frequency roll-off is significantly higher than for 8Ω.

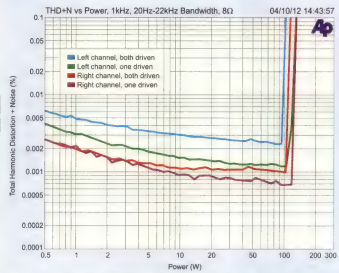

Fig.8: distortion versus power for 8Ω loads. Again, the right channel is noticeably lower in distortion than the left channel. Note that the power supply limits the available continuous power when driving both channels to around 100W while around 135W can be delivered if a single channel is driven. Music power is about 150W even if both channels are driven.

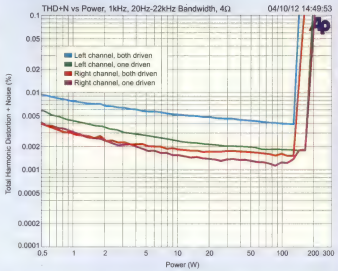

Fig.9: distortion versus power for 4Ω loads. As is typical for power amplifiers, the distortion is somewhat higher when driving 4Ω loads than 8Ω loads, partly due to the increased noise that results from the lower load impedance. The power delivered is higher than for 8Ω, with around 135W per channel available when both are driven and about 200W with a single channel driven.

resistor on each amplifier module to 47Ω. This resistor is located to the right of the RCA input socket and connects the signal ground to the power supply ground. If you have already built the modules, it's simply a matter of clipping off these resistors, removing the lead stubs, clearing the holes with a solder sucker and soldering the new resistors in place.

The second change is in the amplifier power supply wiring. While it's convenient to wire up each amplifier module to its own terminal on the power supply board, this results in a relatively high ground resistance between the two modules. Performance is improved if both are wired to the same supply terminal, with a longer cable running from the left-hand module to the supply terminal on the right side.

This requires one 3-wire supply lead to be longer than previously specified, around 150mm. This is then run around the capacitors at the bottom of the power supply module to reach the power connector for the left channel amplifier.

Keep it as short as possible and use heavy-duty wire as lower resistance means lower distortion. Twist the leads together before plugging it into the connector on the module.

With these changes, your amplifier will give the best performance. **SC**

Vintage Radio

By Rodney Champness, VK3UG

Breville 730 Dual-Wave 5-Valve Receiver

Manufactured in 1948, the Breville 730 table-top receiver was housed in an attractive timber cabinet and covered both the broadcast and shortwave bands. It featured a wide audio response and this, coupled with a large loudspeaker, gave very good performance.

THIS 1948 BREVILLE 730 receiver was obtained by a friend of mine (Marc) in almost original condition. In fact, it's quite rare to come across a set as original as this one, as most sets have had some routine servicing and parts replacement during their life.

Hopefully, any work that has been done on a set will have been carried out by a competent serviceman. An incompetent servicemen or hobbyist can leave a set with more faults than it started out with and can sometimes even destroy hard-to-get parts.

In the case of Marc's Breville 730, the only evidence of any service work was on the band-selection indicator. In fact, the condition of this 65-year-old set is so good that it has obviously been used in a lounge room for most of its life. It had eventually failed when the ECH35 converter developed a short circuit (as confirmed by a valve tester), after which it had been carefully stored away.

As a result, virtually no damage has occurred to either the cabinet or chassis, other than the normal ravages of time.

Circuit details

The Breville 730 has a conventional superheterodyne circuit that's similar to many other receivers of the era. However, it does have some features which, although not unique, are not seen in many other receivers.

Fig.1 shows the circuit details. The signal from the antenna is fed to an input tuned circuit and the position of the band-change switch determines whether shortwave (6-18MHz) or broadcast band tuning is selected.

As shown, the primary of the shortwave antenna tuned circuit (top) is in series with the primary of the broadcast-band antenna tuned circuit. Capacitor C2, a 100pF capacitor across the broadcast-band coil, performs two tasks: (1) it acts as a low impedance to earth for the bottom end of the shortwave antenna primary and (2) it tunes the primary winding of the broadcast-band coil to below the lowest frequency on this band.

This technique enhances the performance at the low-frequency end of the broadcast band.

Note that the primary of the shortwave antenna coil has little effect on the performance of the broadcast-band antenna tuned circuit and may even boost its performance slightly. This circuit works well and simplifies the band switching.

Converter stage

The selected output from the antenna tuned circuit stage is applied to the signal grid of an ECH33/35. This functions as a converter or local oscillator stage.

In operation, the local oscillator tuned circuits are also switched to suit the selected band (either broadcast or shortwave). Note, however, that there is an error in the circuit diagram regarding the oscillator switch position

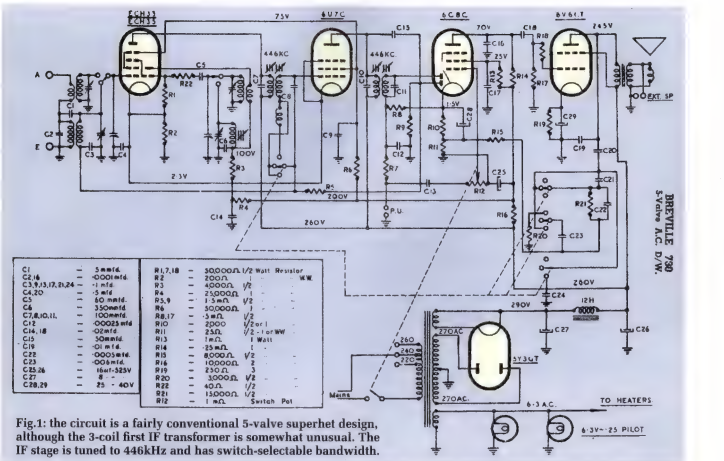

Fig.1: the circuit is a fairly conventional 5-valve superhet design, although the 3-coil first IF transformer is somewhat unusual. The IF stage is tuned to 446kHz and has switch-selectable bandwidth.

– the antenna switch is shown in the broadcast position, while the oscillator switch (immediately following C5) is shown in the shortwave position.

Capacitor C6 acts as both a padder and a phase change network when the broadcast band is selected, to provide positive feedback for the oscillator. It also provides an earth return for the shortwave oscillator primary feedback winding.

By contrast, the shortwave oscillator tuned circuit does not have a padder capacitor attached to its tuned winding. Because of the relatively small difference between the oscillator and the signal frequencies on shortwave, some manufacturers left this component out. Note also that double-spotting or image reception is quite common on shortwave receivers having no RF stage and a 455kHz IF (intermediate frequency).

Once the ECH35 has converted the tuned RF signal to a 446kHz IF (not 455kHz as we normally expect), it is applied to the first IF transformer. This transformer is different to most as it has three windings. The primary is tuned to 446kHz and so is the secondary when the tone control (immediately below it on the circuit) is in its centre (normal) and bass positions.

By contrast, when the tone control is switched to the wide range position, the third coil is switched into circuit, in series with the secondary tuned circuit.

In practice, I suspect that the secondary of this IF transformer is detuned to give a broad response through the IF strip. In addition, I suspect that the third coil is coupled to the first tuned circuit so that the combination of the primary and secondary tuned circuits also broadens the response (with a dip in the centre), so that the receiver has an audio bandwidth of up to 10kHz. This, combined with the set's large loudspeaker, would result in good quality audio although it should be noted that AM broadcast stations later restricted their audio bandwidth.

Following the first IF transformer, the signal is fed to a 6U7G IF amplifier stage and the resulting signal then applied to the second IF transformer. The IF signal is then fed to the detector diode in a 6G8G detector, AGC and audio amplifier valve.

From there, the detected audio signal is fed via R7 and C13 to volume control R12 and then to the grid of the 6G8G. This circuit technique enabled Breville to overcome the oft-experienced problem of "scratchy" volume controls, caused when DC from the detector is applied directly across them.

Note that most radios use a triode as the first audio amplifier but this set uses a 6G8G pentode for additional audio gain. The output from this stage appears at the anode and is applied to the grid of a 6V6GT audio output valve. This in turn drives a speaker transformer and an 8-inch (200mm) loudspeaker.

In addition, the audio on the plate of the 6V6GT is sampled via an RC network and fed to the 6G8G's cathode to provide tone control and negative feedback.

Record player terminals

The receiver is equipped with terminals which allow a record player (PU) to be connected. However, this really doesn't work that well because there's no way of turning off the RF section of the set when records are being played. A combination of the latest broadcast episode of "Biggles" and a recording

The chassis of the Breville 730 was in quite good order although some corrosion was evident, especially on the power transformer cover and at the top of the tuning gang.

of Tommy Dorsey playing over the top of each other would hardly have been satisfactory!

A simple switch would have solved this problem, with one pole used to switch the HT (high-tension) rail to the RF stages on or off and another pole to switch the input to the audio amplifier between radio and turntable.

AGC & power supply

The automatic gain control (AGC) signal is obtained from the plate of the 6U7G and is applied to the AGC diode in the 6G8G. This diode is normally biased off, as its anode is 1.5V negative with respect to the cathode of this valve. As a result, it will not generate any AGC voltage until the incoming signal exceeds 1.5V.

This delayed AGC signal is applied to both the converter (ECH35) and IF amplifier (6U7G) stages. Both these valves share a common cathode resistor (R2) and 2.3V of bias is obtained before the AGC voltage is applied.

The power supply is standard for the era and uses a power transformer plus a 5Y3GT rectifier. The transformer's primary is tapped at 220V, 240V and 260V, while the secondaries consist of a 6.3V winding for the heaters and dial lamps, a 5V winding for the 5Y3GT's filament and a centre-tapped 270V per side winding for the high tension (HT) supply.

The output of the rectifier is filtered using an 8µF electrolytic capacitor (C27), a 12H (Henry) choke and a following 16µF electrolytic (C26).

Cabinet restoration

As mentioned earlier, the cabinet was in quite reasonable condition. However, as antique dealers have often pointed out, timber items stored in very dry environments can develop cracks and this cabinet was no exception.

These cracks and splits were carefully repaired using an epoxy adhesive (Araldite). And because the timber was so dry, Marc applied linseed oil to the inside of the cabinet using a paintbrush. The outside of the cabinet also received attention, with linseed oil applied sparingly using a cloth.

The revitalised cabinet now looks quite good despite the minimal attention paid to it. Further restoration was not considered desirable in the interests of originality.

The original speaker cloth was in poor condition and so this was replaced with some open-weave brown cloth obtained at a haberdashery. It looks authentic even though it isn't genuine speaker cloth. In addition, new rubber buffers were fitted to the bottom of the cabinet, replacing the old ones which had either perished, become hard or had gone missing.

Finally, the cabinet features a celluloid strip which is mounted behind the various controls and which carries the control legends. Although yellowed with time, it is still original and quite legible. These strips usually deteriorate and fall to pieces over time but this one is good for many years yet.

The control markings on the strip are (left to right): On-Off-Volume; Tone – Bass, Normal, Wide Range; Station Selection; and Wave Change SW/BC.

Circuit restoration

The chassis is quite easily removed from the cabinet. This involves removing the four control knobs and the dial-light assembly, followed by the four screws underneath the cabinet which secure the chassis in place. One of the dial lamps had to be replaced, after which the inside of this assembly was repainted white to ensure good reflectivity.

One problem with many sets is that the dial-scale is left behind (ie, still attached inside the cabinet) when the chassis is removed. The Breville 730 is no different in this regard but the redeeming feature of this set is that the alignment frequencies are marked on the edge of the dial scale, along with the position of the dial pointer when the tuning gang is closed.

That certainly makes it easier to get the dial pointer lined up with the

station markings correctly when the chassis is reinstalled.

Once the chassis had been removed, Marc could immediately see that some of the wiring was in need of replacement as the rubber insulation had perished. This particularly applied to the dial-lamp leads as the insulation had actually fallen off and the wires were shorting.

Closer inspection of the wiring revealed several other leads that were shorting due to perished rubber insulation. These leads were all replaced, after which the dial-light supply line was isolated and the valves removed. This was necessary to allow high-voltage tests on the power supply, to confirm that it was in a safe condition.

First, the insulation resistance between the mains and chassis and other windings of the transformer was tested using a high-voltage insulation tester. These were all found to be in good order, with over 200MΩ of resistance in each case.

That done, the old power cord was replaced with a new 3-core cable. This was securely anchored to the chassis using a cord clamp.

Marc then tested and/or replaced a number of parts that are known to cause problems. In particular, all the paper capacitors were replaced with modern polyester types, while the electrolytic capacitors were also

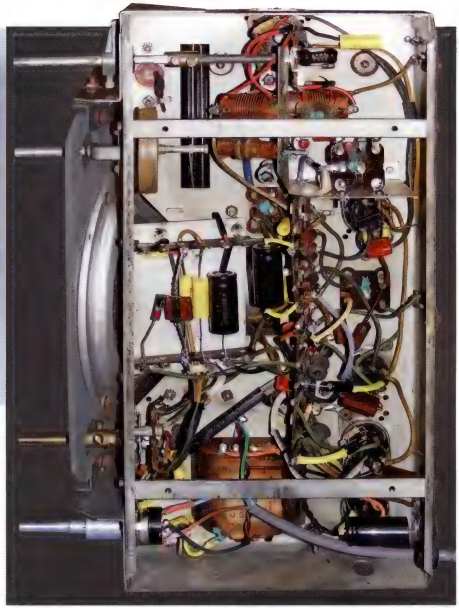

This under-chassis view shows the receiver after restoration. The original paper and electrolytic capacitors were all replaced, along with some of the wiring.

replaced due to their age and the fact that they were visibly leaking. Several resistors were also found to be out of tolerance and were replaced.

The loudspeaker was the next on the list. It had developed a number of cracks along the speaker cone edge and these were repaired with Selleys "Quik Grip".

Testing the valves

Marc's next step was to use his valve tester to check all the valves in the receiver. All tested OK except the ECH35 converter, the tester indicating a short circuit inside this valve. This would have completely stopped the receiver from working and is probably what caused the original owner to retire the set.

Marc had a working ECH35 which could replace the dead ECH35 but its conductive red paint shield (which Philips call "metallisation") had been damaged. As a result, he decided to make an experimental shield to replace the damaged one.

A little investigation showed that the wire contacting the red shield and the earth pin in the valve plug was intact and accessible. A thin strand of wire was therefore soldered to this earth wire (without cracking the valve envelope) and then spiral-wound around the valve envelope. Some "Wire Glue" (available from Jaycar, Cat. NM-2831) was then applied to the envelope to secure it in place.

If access to the earth wire is not practical, a thin wire can be soldered to the earth pin of the valve and then extended up and wound around the

This view shows the components associated with the band-change switch. The two coils associated with the input tuned circuits are clearly visible.

This slide assembly is controlled by the band-switch and indicates which band has been selected.

envelope. Another possible earthing shield can be seen at **www.anderson-products.com**. The sales information says that it is "carbon blended in a non-toxic binder".

Repairing the band indicator

The band-change switch has a lever off to one side of the control shaft and this controls a spring-loaded slide assembly via a length of dial cord. This slide assembly has two small labels which are alternatively visible through a clear window on the righthand side of the dial scale and indicate the band selection (ie, broadcast or shortwave). AWA used a somewhat similar idea in their 7-band receivers of the same era.

This slide assembly wasn't working in the old Breville 730 as the control cord had broken. It had been replaced during the life of the set with single conductor tie wire instead of dial cord but this wire had eventually fractured at the eyelet. Re-stringing the assembly with dial cord soon got it working again.

The tuning gang was also a little worse for wear so it was the next job on the list. First, a small hand blower was used to remove the dust that had accumulated between the plates. This revealed that some of the plates had corrosion on them, so these were carefully cleaned by pushing some fine emery paper between them.

The chassis itself was in quite good order and was simply cleaned using the blower and a small brush.

Testing

Having fixed all the obvious faults in the set, Marc then decided to power the set up to see if there were any other faults in the circuit. As it turned out, the set started up normally and stations could be clearly heard. A quick check then revealed that all the voltages were normal and no components showed any obvious signs of distress.

Even at this early stage, the set's performance was quite good and tweaking both the antenna and oscillator circuits made it even better. In fact, its shortwave performance is better than average for a set of this calibre. However, there were a couple of other issues to be dealt with. One dial globe was dead and more importantly, it was obvious that the volume control pot was worn out and would have to be replaced.

The IF alignment were then checked using a signal generator and a frequency counter (to adjust the signal generator exactly to frequency). Because Marc had no information on adjusting the first IF transformer with its three windings, he decided to proceed with the tone control in the "Normal" position. Before adjusting anything though, each IF transformer was marked so that he could easily return it to its original position should his alignment technique with the uncommon 3-winding IF transformer go awry.

As it turned out, the alignment went smoothly and the first IF transformer was easy to adjust in the standard selectivity position (ie, Normal).

New volume control

With the set now performing well, Marc decided to replace the worn-out on/off-volume control. Unfortunately, he was unable to obtain a direct replacement with a long shaft, so he was forced to use one with a splined shaft and make up an extension shaft on a lathe.

This proved to be a complete success and the new volume control worked smoothly, without crackles. The chassis was then reinstalled in its cabinet and the restoration was complete.

Summary

Breville produced many fine radios and the model 730 was one such set. It performs well and the broad response of the IF amplifier stages (when switched to "Wide Range") means that the set was able to reproduce a wider range of audio frequencies than most other similar sets.

The set is also easy to service, with all parts readily accessible. However, the inability to isolate the RF section when a turntable is connected to the audio amplifier section is a rather puzzling omission, especially since it would have been so easy to do. All that would have been required is an extra position on the band switch, which could then have been labelled "Short Wave", "Broadcast" and "Gram".

In summary, the Breville 730 is an excellent receiver with many interesting features and is a worthy addition to Marc's collection. SC

SILICON CHIP REFERENCE BOOKSHOP

Save 10% SILICON CHIP (PRINT EDITION) SUBSCRIBERS* AUTOMATICALLY QUALIFY FOR A 10% DISCOUNT ON ALL BOOK PURCHASES! (*Does not apply to website orders)

PROGRAMMING and CUSTOMIZING the PICAXE
By David Lincoln (2nd Ed, 2011) **$65.00**

A great aid when wrestling with applications for the PICAXE series of microcontrollers, at beginner, intermediate and advanced levels. Every electronics class, school and library should have a copy, along with anyone who works with PICAXEs. 300 pages in paperback

See Review April 2011

PIC IN PRACTICE
by D W Smith. 2nd Edition - published 2006 **$60.00**

Based on popular short courses on the PIC, for professionals, students and teachers. Can be used at a variety of levels. An ideal introduction to the world of microcontrollers. 255 pages in paperback.

PIC MICROCONTROLLER – your personal introductory course
By John Morton 3rd edition 2005. **$60.00**

A unique and practical guide to getting up and running with the PIC. It assumes no knowledge of microcontrollers – ideal introduction for students, teachers, technicians and electronics enthusiasts. Revised 3rd edition focuses entirely on re-programmable flash PICs such as 16F54, 16F84 12F508 and 12F675. 226 pages in paperback.

OP AMPS FOR EVERYONE
By Carter & Mancini – 3RD EDITION **$100.00**

Substantially updates coverage for low-speed and high-speed applications, and provides step-by-step walk-throughs for design and selection of op amps. Huge 648 pages!

PROGRAMMING 32-bit MICROCONTROLLERS IN C
By Luci di Jasio (2008) **$79.00**

Subtitled Exploring the PIC32, a Microchip insider tells all on this powerful PIC! Focuses on examples and exercises that show how to solve common, real-world design problems quickly. Includes handy checklists. FREE CD-ROM includes source code in C, the Microchip C30 compiler, and MPLAB SIM. 400 pages paperback.

PIC MICROCONTROLLERS: know it all
Multiple authors **$83.00**

The best of subjects Newnes authors have written over the past few years, combined in a one-stop maxi reference. Covers introduction to PICs and their programming in Assembly, PICBASIC, MBASIC & C. 900+ pages in paperback.

USING UBUNTU LINUX
by J Rolfe & A Edney – published 2007 **$27.00**

Ubuntu Linux is a free and easy-to-use operating system, a viable alternative to Windows and Mac OS. Introduces Ubuntu, tells how to set it up, covers the various Open Office applications and gives troubleshooting hints and tips. Highly recommended. 222 pages in paperback

DVD PLAYERS AND DRIVES
by K.F. Ibrahim. Published 2003. **$71.00**

A guide to DVD technology and applications, with particular focus on design issues and pitfalls, maintenance and repair. Ideal for engineers, technicians, students of consumer electronics and sales and installation staff. 319 pages in paperback.

See Review Feb 2004

ELECTRIC MOTORS AND DRIVES
By Austin Hughes - Third edition 2006 **$51.00**

Intended for non-specialist users of electric motors and drives, filling the gap between academic texts and general 'handbooks'. Explores all of the widely-used modern types of motor and drive including conventional & brushless DC, induction motors, steppers, servos, synchronous and reluctance. 384 pages, soft cover.

AC MACHINES
By Jim Lowe Published 2006 **$66.00**

Applicable to Australian trades-level courses including NE10 AC Machines, NE12 Synchronous Machines and the AC part of NE30 Electric Motor Control and Protection. Covering polyphase induction motors, single-phase motors, synchronous machines and polyphase motor starting. 160 pages in paperback.

SELF ON AUDIO
by Douglas Self 2nd Edition 2006 **$69.00**

A collection of 35 classic magazine articles offering a dependable methodology for designing audio power amplifiers to improve performance at every point without significantly increasing cost. Includes compressors/limiters, hybrid bipolar/FET amps, electronic switching and more. 474 pages in paperback.

SMALL SIGNAL AUDIO DESIGN
By Douglas Self – First Edition 2010 **$88.00**

The latest from the Guru of audio. Explains audio concepts in easy-to-understand language with plenty of examples and reasoning. Inspiration for audio designers, superb background for audio enthusiasts and especially where it comes to component peculiarities and limitations. Expensive? Yes. Value for money? YES! Highly recommended. 558 pages in paperback.

AUDIO POWER AMPLIFIER DESIGN HANDBOOK
by Douglas Self – 5th Edition 2009 **$81.00**

"The Bible" on audio power amplifiers. Many revisions and updates to the previous edition and now has an extra three chapters covering Class XD, Power Amp Input Systems and Input Processing and Auxiliarly Subsystems. Not cheap and not a book for the beginner but if you want the best reference on Audio Power Amps, you want this one! 463 pages in paperback.

See Review March 2010

PRACTICAL GUIDE TO SATELLITE TV
By Garry Cratt – Latest (7th) Edition 2008 **$49.00**

Written in Australia, for Australian conditions by one of Australia's foremost satellite TV experts. If there is anything you wanted to know about setting up a satellite TV system, (including what you can't do!) it's sure to be covered in this 176-page paperback book.

NEWNES GUIDE TO TV & VIDEO TECHNOLOGY
By KF Ibrahim 4th Edition (Published 2007) **$49.00**

It's back! Provides a full and comprehensive coverage of video and television technology including HDTV and DVD. Starts with fundamentals so is ideal for students but covers in-depth technologies such as Blu-ray, DLP, Digital TV, etc so is also perfect for engineers. 600+ pages in paperback.

RF CIRCUIT DESIGN
by Chris Bowick, Second Edition, 2008. **$63.00**

The classic RF circuit design book. RF circuit design is now more important that ever in the wireless world. In most of the wireless devices that we use there is an RF component – this book tells how to design and integrate in a very practical fashion. 244 pages in paperback.

PRACTICAL RF HANDBOOK
by Ian Hickman. 4th edition 2006 **$61.00**

A guide to RF design for engineers, technicians, students and enthusiasts. Covers key topics in RF: analog design principles, transmission lines, couplers, transformers, amplifiers, oscillators, modulation, transmitters and receivers, propagation and antennas. 279 pages in paperback.

PRACTICAL VARIABLE SPEED DRIVES & POWER ELECTRONICS
by Malcolm Barnes. 1st Ed, Feb 2003. **$73.00**

An essential reference for engineers and anyone who wishes to design or use variable speed drives for induction motors. 286 pages in soft cover.

See Review Feb 2003

BUILD YOUR OWN ELECTRIC MOTORCYCLE
by Carl Vogel. Published 2009. **$40.00**

Alternative fuel expert Carl Vogel gives you a hands-on guide with the latest technical information and easy-to-follow instructions for building a two-wheeled electric vehicle – from a streamlined scooter to a full-sized motorcycle. 384 pages in soft cover.

NOTE: ALL PRICES ARE PLUS P&P – *AUSTRALIA ONLY: $10.00 per order;* *NZ – $12.00 PER BOOK;* *REST OF WORLD $18.00 PER BOOK*

To Place Your Order:

eMAIL (24/7) silicon@siliconchip.com.au with order & credit card details

OR

FAX (24/7) Your order and card details to (02) 9939 2648 with all details

OR

PAYPAL (24/7) Use your PayPal account *silicon@siliconchip.com.au*

OR

PHONE – (9-5, Mon-Fri) Call (02) 9939 3295 with your credit card details

OR

MAIL Your order to PO Box 139 Collaroy NSW 2097

Or use the handy order form on P105 of this issue

*ALL TITLES SUBJECT TO AVAILABILITY. PRICES VALID FOR MONTH OF MAGAZINE ISSUE ONLY. ALL PRICES INCLUDE GST

SILICON CHIP PARTSHOP

Looking for a specialised component to build that latest and greatest *Silicon Chip* project? Maybe it's the PCB you're after. Or a pre-programmed micro. Or some other hard-to-get "bit". The chances are they are available direct from the ***Silicon Chip*** **PARTSHOP**.

As a service to readers, ***Silicon Chip*** has established the **PARTSHOP**. No, we're not going into opposition with your normal suppliers – this is a direct response to requests from readers who have found difficulty in obtaining specialised parts.

- **PCBs nominated are normally IN STOCK and ready for despatch (you don't have to wait for them to be made!).**
- **Even if stock runs out (eg, for high demand), in most cases there will be no longer than a two-week wait.**
- **One low p&p charge: $10 per order, regardless of how many boards you order! (Australia only; overseas clients – email us for a postage quote).**
- **New project boards will normally be available within days of the magazine on-sale date: no waiting!**
- **Our PCBs are beautifully made, very high quality fibreglass boards with pre-tinned tracks, silk screen overlays and where applicable, solder masks.**
- **Best of all, those boards with fancy cut-outs or edges are already cut out to the *Silicon Chip* specifications – no messy blade work required!**

PROJECT	PUBLISHED	CODE	Price*
AM RADIO TRANSMITTER	JAN 1993	06112921	$25.00
CHAMP: SINGLE CHIP AUDIO AMPLIFIER	FEB 1994	01102941	$5.00
PRECHAMP: 2-TRANSISTOR PREAMPLIFIER	JUL 1994	01107941	$5.00
HEAT CONTROLLER	JULY 1998	10307981	$25.00
MINIMITTER FM STEREO TRANSMITTER	APR 2001	06104011	$25.00
MICROMITTER FM STEREO TRANSMITTER	DEC 2002	06112021	$10.00
SMART SLAVE FLASH TRIGGER	JUL 2003	13107031	$10.00
12AX7 VALVE AUDIO PREAMPLIFIER	NOV 2003	01111031	$25.00
POOR MAN'S METAL LOCATOR	MAY 2004	04105041	$10.00
BALANCED MICROPHONE PREAMP	AUG 2004	01108041	$25.00
LITTLE JIM AM TRANSMITTER	JAN 2006	06101062	$25.00
POCKET TENS UNIT	JAN 2006	11101061	$25.00
STUDIO SERIES RC MODULE	APRIL 2006	01104061	$25.00
ULTRASONIC EAVESDROPPER	AUG 2006	01208061	$25.00
RIAA PREAMPLIFIER	AUG 2006	01108061	$25.00
GPS FREQUENCY REFERENCE (A) (IMPROVED)	MAR 2007	04103073	$55.00
GPS FREQUENCY REFERENCE DISPLAY (B)	MAR 2007	04103072	$30.00
KNOCK DETECTOR	JUNE 2007	05106071	$25.00
SPEAKER PROTECTION AND MUTING MODULE	JULY 2007	01207071	$25.00
CDI MODULE SMALL PETROL MOTORS	MAY 2008	05105081	$15.00
LED/LAMP FLASHER	SEP 2008	11009081	$10.00
12V SPEED CONTROLLER/DIMMER *(Use Hot Wire Cutter PCB from Dec2010 18112101)*			$25.00
CAR SCROLLING DISPLAY	DEC 2008	05101092	$25.00
USB-SENSING MAINS POWER SWITCH	JAN 2009	10101091	$45.00
DIGITAL AUDIO MILLIVOLTMETER	MAR 2009	04103091	$35.00
INTELLIGENT REMOTE-CONTROLLED DIMMER	APR 2009	10104091	$10.00
INPUT ATTENUATOR FOR DIG. AUDIO M'VOLTMETER	MAY 2009	04205091	$10.00
6-DIGIT GPS CLOCK	MAY 2009	04105091	$35.00
6-DIGIT GPS CLOCK DRIVER	JUNE 2009	07106091	$25.00
UHF ROLLING CODE TX	AUG 2009	15008091	$10.00
UHF ROLLING CODE RECEIVER	AUG 2009	15008092	$45.00
6-DIGIT GPS CLOCK AUTODIM ADD-ON	SEPT 2009	04208091	$10.00
STEREO DAC BALANCED OUTPUT BOARD	JAN 2010	01101101	$25.00
DIGITAL INSULATION METER	JUN 2010	04106101	$25.00
ELECTROLYTIC CAPACITOR REFORMER	AUG 2010	04108101	$55.00
ULTRASONIC ANTI-FOULING FOR BOATS	SEP 2010	04109101	$25.00
HEARING LOOP RECEIVER	SEP 2010	01209101	$25.00
S/PDIF/COAX TO TOSLINK CONVERTER	OCT 2010	01210101	$10.00
TOSLINK TO S/PDIF/COAX CONVERTER	OCT 2010	01210102	$10.00
DIGITAL LIGHTING CONTROLLER SLAVE UNIT	OCT 2010	16110102	$45.00
HEARING LOOP TESTER/LEVEL METER	NOV 2010	01111101	$25.00
UNIVERSAL USB DATA LOGGER	DEC 2010	04112101	$25.00
HOT WIRE CUTTER CONTROLLER	DEC 2010	18112101	$25.00
433MHZ SNIFFER	JAN 2011	06101111	$10.00
CRANIAL ELECTRICAL STIMULATION	JAN 2011	99101111	$30.00
HEARING LOOP SIGNAL CONDITIONER	JAN 2011	01101111	$30.00
LED DAZZLER	FEB 2011	16102111	$25.00
12/24V 3-STAGE MPPT SOLAR CHARGER	FEB 2011	14102111	$15.00
SIMPLE CHEAP 433MHZ LOCATOR	FEB 2011	06102111	$5.00
THE MAXIMITE	MAR 2011	06103111	$25.00
UNIVERSAL VOLTAGE REGULATOR	MAR 2011	18103111	$15.00

PROJECT	PUBLISHED	CODE	Price*
12V 20-120W SOLAR PANEL SIMULATOR	MAR 2011	04103111	$25.00
MICROPHONE NECK LOOP COUPLER	MAR 2011	01209101	$25.00
PORTABLE STEREO HEADPHONE AMP	APRIL 2011	01104111	$25.00
CHEAP 100V SPEAKER/LINE CHECKER	APRIL 2011	04104111	$25.00
PROJECTOR SPEED CONTROLLER	APRIL 2011	13104111	$10.00
SPORTSYNC AUDIO DELAY	MAY 2011	01105111	$30.00
100W DC-DC CONVERTER	MAY 2011	11105111	$25.00
PHONE LINE POLARITY CHECKER	MAY 2011	12105111	$10.00
20A 12/24V DC MOTOR SPEED CONTROLLER MK2	JUNE 2011	11106111	$25.00
USB STEREO RECORD/PLAYBACK	JUNE 2011	07106111	$25.00
VERSATIMER/SWITCH	JUNE 2011	19106111	$25.00
USB BREAKOUT BOX	JUNE 2011	04106111	$10.00
ULTRA-LD MK3 200W AMP MODULE	JULY 2011	01107111	$25.00
PORTABLE LIGHTNING DETECTOR	JULY 2011	04107111	$25.00
RUDDER INDICATOR FOR POWER BOATS (4 PCBs)	JULY 2011	20107111-4	$80 per set
VOX	JULY 2011	01207111	$25.00
ELECTRONIC STETHOSCOPE	AUG 2011	01108111	$25.00
DIGITAL SPIRIT LEVEL/INCLINOMETER	AUG 2011	04108111	$15.00
ULTRASONIC WATER TANK METER	SEP 2011	04109111	$25.00
ULTRA-LD MK2 AMPLIFIER UPGRADE	SEP 2011	01209111	$5.00
ULTRA-LD MK3 AMPLIFIER POWER SUPPLY	SEP 2011	01109111	$25.00
HIFI STEREO HEADPHONE AMPLIFIER	SEP 2011	01309111	$45.00
GPS FREQUENCY REFERENCE (IMPROVED)	SEP 2011	04103073	$55.00
DIGITAL LIGHTING CONTROLLER LED SLAVE	OCT 2011	16110111	$30.00
USB MIDIMATE	OCT 2011	23110111	$30.00
QUIZZICAL QUIZ GAME	OCT 2011	08110111	$30.00
ULTRA-LD MK3 PREAMP & REMOTE VOL CONTROL	NOV 2011	01111111	$35.00
ULTRA-LD MK3 INPUT SWITCHING MODUL	NOV 2011	01111112	$25.00
ULTRA-LD MK3 SWITCH MODULE	NOV 2011	01111113	$10.00
ZENER DIODE TESTER	NOV 2011	04111111	$20.00
MINIMAXIMITE	NOV 2011	07111111	$10.00
ADJUSTABLE REGULATED POWER SUPPLY	DEC 2011	18112111	$5.00
DIGITAL AUDIO DELAY	DEC 2011	01212111	$30.00
DIGITAL AUDIO DELAY FRONT & REAR PANELS	DEC 2011	01212111P2/3	$20 per set
AM RADIO	JAN 2012	06101121	$10.00
STEREO AUDIO COMPRESSOR	JAN 2012	01201121	$30.00
STEREO AUDIO COMPRESSOR FRONT & REAR PANELS	JAN 2012	01201121P1/2	$20.00
3-INPUT AUDIO SELECTOR (SET OF 2 BOARDS)	JAN 2012	01101121/2	$30 per set
CRYSTAL DAC	FEB 2012	01102121	$20.00
SWITCHING REGULATOR	FEB 2012	18102121	$5.00
SEMTEST LOWER BOARD	MAR 2012	04103121	$40.00
SEMTEST UPPER BOARD	MAR 2012	04103122	$40.00
SEMTEST FRONT PANEL	MAR 2012	04103123	$75.00
INTERPLANETARY VOICE	MAR 2012	08102121	$10.00
12/24V 3-STAGE MPPT SOLAR CHARGER REV.A	MAR 2012	14102112	$20.00
SOFT START SUPPRESSOR	APR 2012	10104121	$10.00
RESISTANCE DECADE BOX	APR 2012	04105121	$20.00
RESISTANCE DECADE BOX PANEL/LID	APR 2012	04105122	$20.00
1.5kW INDUCTION MOTOR SPEED CONTROLLER	APR 2012	10105121	$35.00
HIGH TEMPERATURE THERMOMETER MAIN PCB	MAY 2012	21105121	$30.00
HIGH TEMPERATURE THERMOMETER F&R PANELS	MAY 2012	21105122/3	$20.00

OTHER ITEMS CURRENTLY IN THE SILICON CHIP PARTSHOP:

TENDA USB/SD AUDIO PLAYBACK MODULE (TD896)	JAN 2012	$33.00
TENDA USB/SD AUDIO PLAYBACK MODULE (TD896)	JAN 2012	$33.00
2-WAY JST CONNECTOR LEAD	JAN 2012	$3.45
3-WAY JST CONNECTOR LEAD	JAN 2012	$4.50

*** All prices P&P – $10 Per order within Australia. (Overseas customers please email us for a P&P quote)**

G-FORCE METER/ACCELEROMETER SHORT FORM KIT (contains PCB (04108111), programmed PIC micro, MMA8451Q accelerometer chip and 4 MOSFETS)	AUG 2011/NOV 2011	$44.50
RADIO & HOBBIES ON DVD-ROM (Needs PC to play!)	n/a	$62.00
AMATEUR SCIENTIST VOL4 ON CD	n/a	$62.00

AND NOW THE PRE-PROGRAMMED MICROS, TOO!

Micros from copyrighted and contributed projects may not be available.

As a service to readers, *SILICON CHIP* is now stocking microcontrollers and microprocessors *used in new projects* (from 2012 on) and some selected older projects – **pre-programmed and ready to fly! Price for any of these micros is just $15.00 each + $10 p&p per order**

PIC18F2550-I/SP	Batt Capacity Meter (Jun09), Intelligent Fan Controller (Jul10)	PIC18LF14K22	Digital Spirit Level (Aug11), G-Force Meter (Nov11)
PIC18F4550-I/P	GPS Car Computer (Jan10), GPS Boat Computer (Oct10)	PIC18F14K50	USB MIDIMate (Oct11)
PIC16F877A-I/P	6-Digit GPS Clock (May-Jun09), Lab Digital Pot (Jul10) Semtest (Feb-May12)	ATTiny861	VVA Thermometer/Thermostat (Mar10), Rudder Position Indicator (Jul11)
dsPIC33FJ128GP802-I/SP	Digital Audio Signal Generator (Mar-May10), Digital Lighting Controller (Oct-Dec10), SportSync (May11), Digital Audio Delay (Dec11)	PIC12F675	UHF Remote Switch (Jan09), Ultrasonic Cleaner (Aug10), Ultrasonic Anti-fouling (Sep10)
PIC16F88-E/P	Projector Speed (Apr11), Vox (Jun11), Ultrasonic Water Tank Level (Sep11), Quizzical (Oct11), Ultra-LD Preamp (Nov11)	ATTiny2313	Remote-Controlled Timer (Aug10)
		ATMega48	Stereo DAC (Sep-Nov09)
PIC18F27J53-I/SP	USB Data Logger (Dec10-Feb11)	PIC18F1320-I/SO	Intelligent Dimmer (Apr09)
PIC32MX795F512H-80I/PT	Maximite (Mar11), miniMaximite (Nov11)	dsPIC33FJ64MC802-E/SP	Induction Motor Speed Controller (Apr-May12)

***Note: P&P is extra ($10 per order). Prices listed include GST and are valid only for month of publication of this list; thereafter are subject to change without notice.** 05/12

When ordering, be sure to nominate BOTH the micro required and the project for which it must be programmed.

SILICON CHIP Order Form

Your Name:	
Your Address:	
State:	Postcode:
Country:	
Telephone No:	Fax No:
Email Address:	

Please supply:

Qty	Item Description	Item Price	P&P if extra	Total Price
Thank you for your order.			TOTAL $A	

Payment options:

- EFT/Bank Deposit: Silicon Chip BSB 012-243 A/C 2636-80001 *Please confirm transfer by email to silicon@siliconchip.com.au or fax 02 9939 2648*
- PayPal: From your PayPal account: "Send Money" to **silicon@siliconchip.com.au**
- Cheque/Money Order/Bank Draft: payable to Silicon Chip (Australian dollars only) *Mail to Silicon Chip PO Box 139 Collaroy NSW 2097 Australia*
- Credit Card (see below; Visa and Mastercard ONLY): *Fax to 02 9939 2648, telephone 02 9939 3295 or mail or email to above address.*

If paying by Visa or Mastercard please enter your details below **(we DO NOT accept Amex, Diners or other credit cards)**

Card No: ____ ____ ____ ____ – ____ ____ ____ ____ – ____ ____ ____ ____ Expiry Date: ____ / ____

Cardholder Name: Signature:

To Place Your Order:

eMAIL (24/7) silicon@siliconchip.com.au with order & credit card details **OR**

FAX (24/7) This form (or a photocopy) to (02) 9939 2648 with all details **OR**

PAYPAL (24/7) Use PayPal to pay silicon@siliconchip.com.au **OR**

PHONE - (9-5, Mon-Fri) Call (02) 9939 3295 with your credit card details **OR**

MAIL This form to PO Box 139, Collaroy NSW 2097

*ALL ITEMS SUBJECT TO AVAILABILITY. PRICES VALID FOR MONTH OF MAGAZINE ISSUE ONLY. ALL PRICES IN AUSTRALIAN DOLLARS AND INCLUDE GST WHERE APPLICABLE. 05/12

ASK SILICON CHIP

Got a technical problem? Can't understand a piece of jargon or some technical principle? Drop us a line and we'll answer your question. Write to: Ask Silicon Chip, PO Box 139, Collaroy Beach, NSW 2097 or send an email to silicon@siliconchip.com.au

Courtesy light circuit cycling on and off

I recently assembled an interior light delay kit (SILICON CHIP, June 2004). I wired it up with a test light, switch and 12V power supply on my bench before I tried installing it into my vehicle.

The problem I am having is that after dimming the light turns back on, then times out, then dims again etc. All the polarised components are installed correctly and I have used the proper capacitors for 12V operation. Reversing wires to the switch makes no difference. Any suggestions? (D. S., Calgary, Canada).

● For the circuit to drive the lamp to cycle on and dim and then back on again, capacitor C1 must be being discharged each time. That normally only occurs if the door switch closes again or if 12V is removed.

Alternatively, there may be a problem when using a test light to check the circuit operation. That's because the test lamp may not have a sufficiently low resistance which might be because it consists of a LED and series resistor instead of a light bulb.

The circuit does rely on power being supplied via the cold filament. So to test operation correctly, you may need to connect a 100Ω 5W resistor in parallel with your test light. This resistor would also be required if the courtesy lights in the vehicle are LEDs instead of incandescent lamps.

Using the SportSync as an audio delay line

I was wondering if the SportSync Delay for Digital TV (SILICON CHIP, May 2011) could be modified to work as an audio delay line or a voice pitch shifter?

I'm an analog man myself and do not know much about digital circuitry. But based on Figs.1 & 2 in the May 2011 article, I wonder if this could be done in a future article of SILICON CHIP? (K. S., Scranton PA, USA).

● Yes, the SportSync project could be used as a generic audio delay line as long as 40kHz, 12-bit mono quality is good enough. The sample rate could be increased but the hardware isn't present for a second channel and the micro's internal ADC/DACs limit the voltage resolution. While the voltage resolution is nominally 12 bits, when you take noise into account the performance is more like 11 bits.

The software could be modified to provide smaller delay adjustment steps and better repeatability as well as a shorter minimum delay setting.

For use as a voice pitch shifter, with different software it could be configured to perform any DSP task as long as 40MIPS is enough CPU power. The same sound quality proviso as stated above would apply.

What causes chip failure on credit cards?

I received my first credit card with an embedded chip around two years ago. In that time the chip has failed three times and I have been sent a replacement card each tim.

I have used cards with the normal magnetic strip for over 30 years and have never had a failure; they are replaced every three years or so at the expiry date. The card is always stored in my leather wallet and the copper colouring of the embedded chip does show some signs of wear as it turns to a silvery colour but looks in good condition.

Considering the amount of information that can be stored digitally in the chip it seems ludicrous that they should fail so easily. Can you enlighten me as to why I am experiencing these problems as no amount of questions

Adapting The Radiator Coolant Alarm To Detect Water In Diesel Fuel

Over the years I have built several of the coolant level kits (SILICON CHIP, June 1994) for my cars and utes which has saved me many dollars; a great kit, an oldie but a goody.

I have now joined the grey nomads with a 20-year old Coaster camper van which is going to receive the water level alarm. There have been serious articles in *4WD Action* concerning the effect of water in diesel fuel and the damage that this can cause.

I would like to adapt the kit to run off 24V and to detect the presence of water in fuel, either diesel or petrol, to give it a greater audience. The alarm would be a back-up to any existing unit in the vehicle. I have not made or adapted any filter system at this stage for the sensor but have a few ideas in mind.

Any assistance would be appreciated. (P. G., Manly, Qld).

● The Coolant Level Alarm circuit could be run from 24V if 16V zener diode ZD1 is changed to 33V and the 1kΩ resistor feeding the 4.7V zener diode (ZD2) is changed to 2.7kΩ. The electrolytic capacitors should be upgraded from 16V to 35V rating.

The circuit's measurement of conductivity should be suitable for detecting the difference between water and fuel. The comparator threshold level can be changed to suit the water/fuel conductivity voltage by setting the voltage divider at pin 6 of comparator IC1a. The 6.8kΩ and 10kΩ voltage divider resistors across 4.7V zener diode ZD2 should be removed. Instead, a trimpot across ZD2, with the wiper connected to pin 6, should allow suitable voltage variation.

Note that we have not tested these suggested modifications. Note also that the sensor's ability to withstand petrol and diesel should be checked to ensure that the plastic of the sensor is not dissolved or softened.

directed at the card providers gives me any plausible explanations? (M. T., Donvale, Vic).

● We really have no idea as to why these credit cards fail but we would be prepared to bet that it is due to a failure of the encapsulation protecting the chip.

Changing the anti-fouling cut-off voltage

I have built the Ultrasonic Anti-fouling kit (SILICON CHIP, September & November 2010). Is it possible to alter the turn-off voltage as 11.5V is way too low? As indicated in the attached link (**http://marine-electronics.net/techarticle/battery_faq/b_faq.htm**) you will see a battery is 50% discharged at 12.24V. I want to maximise my battery life by not deep-discharging it.

Can I alter to the kit to stop at this voltage? (M. V., via email).

● As you state, the website quotes that a battery is 50% discharged at 12.24V. Note that this is the open-circuit voltage of the battery (one that has been allowed to stand without power draw) and at a specific gravity electrolyte measurement of 1.265 when fully charged for a wet lead-acid battery and also at 26.7°C. They also state that the open-circuit voltage will vary for gel cell (SLA) and AGM batteries, so you would need to check the manufacturer's specifications.

Trying to gauge battery capacity simply by measuring battery voltage is open to a wide interpretation. Typically, a battery is deemed to be fully discharged at 10.8V when discharged at the 10-hour rate, according to Exide battery data. The 11.5V we have chosen is a conservative threshold that ensures that the battery is not fully discharged. In fact, if you measured the battery voltage after the anti-fouling driver had switched off, you would find that the voltage would bounce up to pretty close to 12V.

On the other hand, if you did adjust the unit for a higher cut-off voltage, you would find that the anti-fouling driver will be switched off most of the time. That's because a battery will generally provide 12V or less under load unless it is being charged with sufficient current to raise this voltage.

Assume you set the cut-off voltage for 11.8V. Once the battery reached this voltage, the anti-fouling unit would switch off and then not turn on again until the battery voltage had risen substantially above 12V because of the hysteresis in the setting.

(Step 1). The switch-off voltage is determined by the resistor between pin 5 of IC2 and the positive supply rail. Let's call this R1. It is 20kΩ in the original design, giving an 11.5V threshold. The formula to calculate the value for a different threshold is:

R1 = ((Switch off threshold voltage x 10kΩ) - 38.4kΩ) ÷ 3.83

(Step 2). To calculate the switch-on voltage (12V in the original design):

Switch on threshold voltage = 4 x (R1 + 10kΩ) ÷ 10kΩ

For example, to switch off at 12.24V R1 should be 2.2kΩ. Switch on voltage would then be 12.8V.

Bypass switch needed for Stereo Compressor

For my use the Stereo Compressor featured in the January 2012 issue appears to have a major flaw. It needs a "bypass" facility for when it is not in use. It appears to be easy to implement. Two relays could be easily added and these would be activated when the unit is turned on.

While I could do this on the current PCB, in the current box it would be a squeeze. Can your designers see any problem with just using one relay which simply connects the input to the output when the unit is powered off? Would having the un-powered unit still connected to the audio line be likely to have any serious effect? (G. S., Mildura, Vic).

● The compressor's input cannot be directly connected to the output when power is off since the input would then be directly driving the output of IC3 via the 150Ω resistor, ie, the left signal would be driving IC3b's output and the right channel input would be driving IC3a's output. This would severely load the input signal.

However, a single relay that incorporates double-pole change-over contacts could be used to provide for a change-over of signal.

For each channel (left and right channels), connect one set of relay contacts with the normally open (NO) contact to the compressor output and the normally closed (NC) contact to the input and use the common (C) connection of the relay as the signal output. This will then select between the output of the compressor when the relay is on and the input to the compressor when the relay is off.

Note that the signal levels may be different between when the compressor is on and when the signal is diverted directly from the input. The level difference is not due to compressor action but because of the level and volume settings available for the

Toroidal Inductor For The 100W 12V Converter

I have a question concerning the 12V 100W converter published in May 2011. Unfortunately, I cannot seem to find a source for the toroidal inductor core outside of Australia. I would very much appreciate any specifications you can supply me such as inductance, current rating, etc so that I may be able to wind a similar inductor using a different core.

I have a core that I salvaged from a large AC to DC inverter that is slightly smaller (by less than 10%) than the size that is stated in the article. Do you think that it could be used if a few extra turns of wire were added?

Any input is greatly appreciated, as I would like to build many of these for friends and colleagues that are constantly on the go with their mobile PCs. (J. K., Baltimore, Maryland, USA).

● The toroid is a powdered-iron type with dimensions of 42 x 22 x 17mm and an Al value of 90. The formula for the number of turns based on the Al value is number of turns = 1000 x the square root of (the inductance in mH divided by the Al value).

The maximum current for the wound inductance is calculated from the 16mJ value for the core, where this = (inductance L) x (the maximum instantaneous current squared).

The windings and core Al value are not critical and a slightly smaller core could be used if necessary, but the core must be powdered-iron, not ferrite. You can also obtain the specified core from **www.jaycar.com** (Cat. LO-1246).

Checking The Polarity Of PA Loudspeakers

As a school janitor/groundsman I am expected to know and do everything (actually even before it happens!) The school's 100V line PA amplifier system is now in need of "tweaking" after the installation of a 250W Redback amplifier and separate Redback mixer. It all works reasonably well but the issues are with the horn-type speakers, some of which are probably 20 years old.

They want to play pacifying music over the system and currently it is not "pacifying" due to the poor audio quality. I foolishly mentioned the availability of quality TOA music horns as suitable replacements that would help. However, I have had various conflicting advice concerning the "polarity" or correct "phasing" when connecting them up. I would have thought the marked wire would be the "common", ie, negative, and the un-marked wire would be the "positive".

Some of these speakers are in sight of each other and I don't want to have them competing with each other. I have tried a multimeter at the back of the amplifier but it does not read on AC or DC (when at rest, no music being played but amplifier on) so this would prevent me checking "polarity" at each speaker location. How do I check the polarity please?

The wires are a total mishmash draped through roof crawl spaces etc and change type and colour from start to finish at times. (R. M., Brisbane, Qld).

- There is no easy answer to your question, especially as it is an old installation and you cannot be certain that the speaker wires are connected "stripe to stripe" where there are joins. Nor can you be certain they're not corroded, have faulty insulation, or are open or short circuit, etc.

Unfortunately, in most PA horns you cannot easily get access to the diaphragm (once you do you've probably destroyed the driver!) so you cannot check forward or backward movement as you can with a typical speaker.

You are right that the usual practice is simply to connect the striped or marked wire of the figure-8 cable to the negative terminal so then all speakers will be "in phase". But if the speakers are separated by a reasonable distance, say 20m+, correct phasing isn't as important as you might imagine. Sure, it's better to have them all in phase but PA speakers, especially horns, don't have a good bass response anyway – maybe this is the reason for your perceived poor sound quality.

You won't do any damage by having one or more speakers connected out of phase. You are also right that you should not be able to read any voltage at the amplifier speaker terminals when not playing anything. Not that it will mean anything but you should be able to read an AC voltage when there is something playing but definitely not DC – if you can something is wrong with the amplifier!

If you have access to the individual speaker lines, we'd be much more inclined to check their impedance with an AC impedance meter. From this, if you know what the power tap is on your speakers and how many are connected in parallel (the correct way to wire 100V speakers) you can tell if you have a problem. In a typical school-type PA system, we'd expect to see the speakers set to their 5W or 10W tap, so each should have an impedance of about 2kΩ or 1kΩ.

If you cannot access individual lines, check the overall impedance (when not connected to the amplifier) and use Ohm's Law to work out if the number of speakers in parallel equates to roughly the right impedance; eg, 10 speakers on 10W tap (1kΩ each) should be somewhere around 100Ω, plus a bit for the speaker cables themselves. A wildly different figure than this probably means a faulty speaker or line.

Note that the resistance as measured with a multimeter will not show the correct reading, as you are measuring the DC resistance. It's OK for a really rough guide but really only tells you if you have, for example, an open-circuit or shorted speaker line.

compressor which are not effective for the direct signal bypass.

Confusion about power factor

I've been reading your past articles about power factor correction and electricity saving equipment that has recently been a hot topic in the media. I just wanted to ask one question. Energex say that we are charged in kWh which is amps x volts x power factor. When testing these types of products I presume that you have tested what the energy meter is ACTUALLY measuring.

Can you tell me what you discovered when you tested the meter and whether it actually records power factor?

I've been reading a few comments in forums of people who say they have tested it and found that they don't measure power factor at all. They say they don't even have the means to measure it. If this is the case then these power saving products would work to reduce what we are being billed. My partner is arranging for one of the sales guys to visit our home so we can find out more about these products and we would value your opinion.

Many people have seen their bills jump after having a smart meter installed. Have you tested these at all? (M. E., Regents Park, NSW).

- Regardless of what Energex told you, domestic electricity customers are not charged for power factor. Reducing the power factor of loads in your home will make no difference to your bill. Actually, on the basis of our measurements, it will lead a to a very slight increase in your power bill.

We have several types of power meter, some of which measure power factor while others don't. It doesn't matter whether they measure power factor or not because the calculation for power in watts only takes into account the voltage and current components which are actually in phase. So you should get the same reading, regardless of whether the power meter used has a readout of power factor or not.

Smart meters are a different proposition entirely because they vary the electricity tariff according to the time of day. In fact, most people who have smart meters installed will experience a substantial increase in their power bills unless they are able to operate their major power-consuming appliances in the off-peak periods. Most people cannot do that because, for example, they need to operate their air-conditioner or heaters at the time of peak power tariff.

In fact, smart meters are only "smart" for the electricity retailers. They are very bad, not smart at all, for consumers. However, even if you do have a smart meter installed, you are not charged for power factor.

Dual battery switcher wanted

I was wondering if SILICON CHIP has ever put together, or might consider putting together, a "Dual Battery Isolator Relay Controller" for "small" automotive applications. I'm not referring to the large high-current dual-battery systems used for caravans or campers with deep cycle batteries of 200Ah or more. I'm referring to just using a small 12V sealed lead-acid battery, say 5Ah, as the power source sink for a car PC or headrest DVD player. Call my desired target solution a "12V In-Car Smart UPS" if you will.

The 12V automotive power supplies in car PCs have not, in my experience, been 100% reliable at shutting down the host operating system. I keep hearing of situations where a blocked shutdown, hibernation or even a delayed sleep results in the car PC staying on overnight until the main battery goes dead.

Having an isolated dual-battery system would prevent this from hurting your attempt to commute the next day.

Also, on a very long drive when the kids are watching DVDs on an after-market car DVD player (headrest, ceiling, standalone etc), as soon as the car is turned off at a petrol station or a toilet stop, their playback gets shut down too. If you're playing a normal DVD then most headrests have a resume-from-last-position feature. But when playing AVI or DiVX files from a CD/DVD or thumb drive, the poor kids have to skip a gazillion times to find their place again once we are back under way. Having the headrests

Reed Switch & Frequency-Activated Switch

With reference to your Frequency-Activated Car Switch project (SILICON CHIP, June 2007), is it possible to use a reed switch with a couple of magnets instead of the sensors that were suggested? (K. W., via email).

- A reed switch can be used but a 10kΩ resistor should be used to pull the voltage up or down when the reed switch contacts are open.

If the reed switch is wired to GND and the frequency switch input, connect the 10kΩ resistor between the input and 7.4V supply. Alternatively, if the reed switch is wired between the 7.4V supply and the frequency switch input, connect the resistor between the input and GND.

Radio, Television & Hobbies: the COMPLETE archive on DVD

YES! MORE THAN A QUARTER CENTURY OF ELECTRONICS HISTORY!

This remarkable collection of PDFs ***covers every issue*** of R & H, as it was known from the beginning (April 1939 – price sixpence!) right through to the final edition of R, TV & H in March 1965, before it disappeared forever with the change of name to EA.

For the first time ever, complete and in one handy DVD, every article and every issue is covered.

If you're an old timer (or even young timer!) into vintage radio, it doesn't get much more vintage than this. If you're a student of history, this archive gives an extraordinary insight into the amazing breakthroughs made in radio and electronics technology following the war years.

And speaking of the war years, R & H had some of the best propaganda imaginable!

Even if you're just an electronics dabbler, there's something here to interest you.

- **Every issue individually archived, by month & year**
- **Complete with index for each year**
- **A must-have for everyone interested in electronics**

Please note: this archive is in PDF format on DVD for PC. Your computer will need a DVD-ROM or DVD-recorder (not a CD!) and Acrobat Reader 6 or above (free download) to enable you to view this archive. This DVD is NOT playable through a standard A/V-type DVD player.

ONLY $62.00 +$10.00 P&P

Exclusive to SILICON CHIP

HERE'S HOW TO ORDER YOUR COPY:

BY PHONE:* (02) 9939 3295 9-5 Mon-Fri

BY FAX:# (02) 9939 2648 24 Hours 7 Days

BY EMAIL:# silicon@siliconchip.com.au 24 Hours 7 Days

BY MAIL:# PO Box 139, Collaroy NSW 2097

BY INTERNET:^ siliconchip.com.au 24 Hours 7 Days

* Please have your credit card handy! # Don't forget to include your name, address, phone no and credit card details. ^ You will be prompted for required information

Hand Capacitance Affects Motor Speed Controller

I have a question regarding the Full-Wave Motor Speed Controller published in the May 2009 issue. It operates basically as I would expect, except for one minor anomaly.

If I set a relatively low speed with my hand resting against the metal case, then remove my hand from the case, I see a noticeable speed increase. I've tried varying the setting of the internal trimpot but it doesn't seem to affect this behaviour. It's fine if I adjust the speed and make sure I don't touch the case.

Do you have any suggestions as to how to minimise this behaviour? The mains wiring is well clear of the pot, so I don't think it's related to that. (P. P., Inverell, NSW).

● This is probably caused by the case not being properly earthed. Make sure that both the lid and the case are earthed to the mains earth via the earth pin on the IEC connector. Check also that the power lead has an earth wire connecting between the earth pins of the connectors at each end.

continue to play – or even pause – until the car begins moving again would solve that issue too.

Using just a 12V relay for dual-battery operation means that the batteries are connected together as soon as the ignition is on, possibly adding load to the main battery while it is cold-cranking if the second battery is fully discharged. I don't think that's ideal. I think automotive diode solutions are another option but I'm not sure if the diode voltage drop would be an issue.

The ideal solution would be to have a little "smart" controller between the vehicle ignition line and the trigger input of a suitable small 12V relay. This could delay activating the relay for a set period of time after the vehicle main battery/alternator voltage has reached and stabilised above a "turn on" level and could shut down when the battery/alternator voltage drops below a "turn off" level. So the batteries are connected only when the car is running.

This "smart" controller might also be used to trigger high-current relays in a larger solution as well if needed, but would be ideal for the smaller solution proposed here. Incidentally, it would also be an ideal 'trigger' for turning a car PC on and off – the "On" occurring after cold-cranking has completed and the "Off" occurring at vehicle shut down.

Being able to use a small lead-acid battery lends itself to limited space and costs constraints and satisfies the requirements for the situations listed previously. Why are existing solutions not appropriate? The extended run time of a large deep-cycle battery is not required, therefore we can opt out of both the large-space and high-current challenges it poses. Off the shelf dual-battery isolators are not ideal in a small solution, because they are size and cost-geared to large current applications.

So a "Dual Battery Isolator Relay Controller" on its own would be ideal. Alternatively, a project that includes a battery, power control and even perhaps "Vehicle Power Socket and 5V USB" outputs ready to go – ie, a complete "12V In Car UPS" – would be just fantastic! (L. P., Rutherford, NSW).

● A dual-battery isolator was published in Circuit Notebook in March 2007. This used a 40A relay. Horn relays would be suitable even though they have a rating higher than you are after but they are rugged and ideally suited for automotive use.

Pushbutton engine start circuit wanted

I have searched the net for a DIY engine start/stop button but with no success. All I can find is a pushbutton instead of the key, so you still need to insert the key into the ignition and turn ACC on, so why bother? I was hoping to do a pushbutton start as in late BMWs (keyless), so no key will be needed.

My car is not equipped with an immobiliser so the process will be easier. What I'm looking for is a way to get into the car using the alarm remote control, depress the brake pedal then push the button and the car will start. If you don't press the brake pedal it will only turn ACC on. If the engine is already running, then pressing the button will stop the engine; that's the idea.

● You can forget about that idea if you have a reasonably modern car with a key start. The problem is that the ignition keys in modern cars have an inbuilt RFID transponder. The key must be in the lock before the car will start.

There is no way you can overrule this unless you can hack the software in the car's body computer. If your car is older, as indicated by its lack of an

. . . continued on page 112

WARNING!

SILICON CHIP magazine regularly describes projects which employ a mains power supply or produce high voltage. All such projects should be considered dangerous or even lethal if not used safely.

Readers are warned that high voltage wiring should be carried out according to the instructions in the articles. When working on these projects use extreme care to ensure that you do not accidentally come into contact with mains AC voltages or high voltage DC. If you are not confident about working with projects employing mains voltages or other high voltages, you are advised not to attempt work on them. Silicon Chip Publications Pty Ltd disclaims any liability for damages should anyone be killed or injured while working on a project or circuit described in any issue of SILICON CHIP magazine.

Devices or circuits described in SILICON CHIP may be covered by patents. SILICON CHIP disclaims any liability for the infringement of such patents by the manufacturing or selling of any such equipment. SILICON CHIP also disclaims any liability for projects which are used in such a way as to infringe relevant government regulations and by-laws.

Advertisers are warned that they are responsible for the content of all advertisements and that they must conform to the Competition & Consumer Act 2010 or as subsequently amended and to any governmental regulations which are applicable.

MARKET CENTRE

Cash in your surplus gear. Advertise it here in SILICON CHIP

ELNEC IC PROGRAMMERS

High quality
Realistic prices
Free software updates
Large range of adaptors
Windows 95/98/Me/NT/2k/XP

CLEVERSCOPE USB OSCILLOSCOPES

2 x 100MSa/s 10bit inputs + trigger
100MHz bandwidth
8 x digital inputs
4M samples/input
Sig-gen + spectrum analyser
Windows 98/Me/NT/2k/XP

IMAGECRAFT C COMPILERS

ANSI C compilers, Windows IDE
AVR, TMS430, ARM7/ARM9
68HC08, 68HC11, 68HC12

GRANTRONICS PTY LTD

www.grantronics.com.au

Battery Packs & Chargers

Siomar Battery Engineering
www.batterybook.com
Phone (08) 9302 5444

ALTRONICS

SERVICE TECHNICIAN (CASUAL) SYDNEY BRANCH (AUBURN)

We require the services of a bright and enthusiastic person to help service our product returns. Duties will include fault finding, repairs & RA processing. Computer literacy & an extensive knowledge of electronics is a must. Australian residents only.

To apply contact NSW Manager Peter Deeb peter.deeb@altronics.com.au or post applications to 15 Short St, Auburn, NSW 2144.

SPLat CONTROLS **Tough times demand innovative solutions!**

In tough economic times you need to watch every dollar. SPLat embedded controllers give OEMs more functionality per dollar than any competing product. Check out our website today and discover how we can help you remain competitive.

Made in Australia, used by OEMs world-wide

splat-sc.com

Printed Circuit Board Manufacture

48-Hour service • High quality • Low prices
1 offs to any quantity
Artwork design if required
Call for obligation free quote...
INSTANT PCBs, POBox 448, Avalon 2107
Ph (02)9974 1189 Fax (02)9974 5491

FOR SALE

PCBs MADE, ONE OR MANY. Any format, hobbyists welcome. Sesame Electronics Phone (02) 8068 2713. **sesame@sesame.com.au** **www.sesame.com.au**

LEDs! Nichia, Cree and other brand name LEDs at excellent prices. LED drivers, including ultra-reliable linear driver options. Many other interesting and hard-to-find electronic items! **www.ledsales.com.au**

questronix.com.au – audiovisual experts solve home, corporate security and devotional installation & editing woes. QuestAV CYP, Kramer TVone (02) 4343 1970 or **sales@questronix.com.au**

PCBs & Micros: Silicon Chip Publications can supply PCBs and programmed micros for recent (and some not so recent) projects described in the magazine. See our advert in this issue for further details. Phone (02) 9939 3295 or email **silicon@siliconchip.com.au**

KIT ASSEMBLY & REPAIR

KEITH RIPPON KIT ASSEMBLY & REPAIR:

* Australia & New Zealand;
* Small production runs.

Phone Keith 0409 662 794. **keith.rippon@gmail.com**

GEOFF COPPA KIT ASSEMBLY AND TROUBLE SHOOTING SERVICE. Phone Geoff on 0414226102. **coppamitchell2@bigpond.com**

WANTED

CUSTOMERS WANTED: Truscotts Electronic World – large range of semiconductors and passive components for industry, hobbyist and amateur projects including Drew Diamond. 27 The Mall, South Croydon, Melbourne. Phone (03) 9723 3860. **www.electronicworld.com.au**

WANTED: EARLY HIFIs, AMPLIFIERS, Speakers, Turntables, Valves, Books, Quad, Leak, Pye, Lowther, Ortofon, SME, Western Electric, Altec, Marantz, McIntosh, Tannoy, Goodmans, Wharfedale, radio and wireless. Collector/Hobbyist will pay cash. (07) 5471 1062. **johnmurt@highprofile.com.au**

DESIGN SERVICES

Sethna Electronics is a small business that specializes in the design and manufacture of electronic based products. We do low volume manufacturing and reverse engineering. Contact 042 5239 254 or email **nbsethna@gmail.com** to discuss your requirements.

ADVERTISING IN MARKET CENTRE

Classified Ad Rates: $29.50 (incl. GST) for up to 20 words plus 85 cents for each additional word. Display ads: $54.50 (incl. GST) per column centimetre (max. 10cm). Closing date: 5 weeks prior to month of sale. To book, email the text to **silicon@siliconchip.com.au** and include your name, address & credit card details, or fax (02) 9939 2648, or phone (02) 9939 3295.

RFMA RF Modules Australia
Low Power Wireless Connectivity Specialists

USB BLUETOOTH
PARANI UD100-G01
Class 1 Bluetooth 2.0+EDR
Working distance to 300m
Toshiba or BlueSoleil driver
Optional 5dBi Dipole Antenna

Applications:
Rural
Utilities
Industrial
Commercial
Government
Meter Reading

CONNECT TO YOUR SOLAR INVERTER THE EASY WAY!

RF Modules Australia. P.O. Box 1957 Launceston, TAS., 7250.
Ph: 03-6331-6789. Email: sales@rfmodules.com.au. Web: rfmodules.com.au

DOWNLOAD OUR CATALOG AT
www.iinet.net.au/~worcom
WORLDWIDE ELECTRONIC COMPONENTS
PO Box 631, Hillarys, WA 6923
Ph: (08) 9307 7305 Fax: (08) 9307 7309
Email: worcom@iinet.net.au

Circuit Ideas Wanted
We pay up to $100 for contributions to Circuit Notebook, or you could win a$150 gift voucher.
Silicon Chip Publications, PO Box 139, Collaroy, NSW 2097.

Ask SILICON CHIP

. . . continued from p110

immobiliser, your idea may well be feasible but we have not produced any suitable circuitry.

Motor is noisy with PWM speed control

I built the 12V 10A speed control kit. It works fine but there is a very loud 2kHz tone coming from the motor. It is just a 12V fan but the tone is louder than the motor! Can you give me some advice please? (G. F., via email).

● We are not sure if you are referring to the controller from June 1997 or from June 2011. The June 2011 controller has frequency adjustment so that the motor noise can be reduced. You set it to the frequency where the motor makes the least noise associated with the PWM switching.

The June 1997 controller would require the oscillator components to be altered to adjust the frequency. We recommend using a 100nF capacitor at pin 5 of IC1 and a resistance value ranging from 10kΩ up to 100kΩ at pin 6; a 100kΩ trimpot could be used.

While noise will never be completely eliminated with such a pulse width modulated controller, the noise can be reduced by selecting the optimum frequency. The frequency can be adjusted from 100Hz to 1kHz or thereabouts. Note that the higher frequencies may not provide a linear speed control but this depends on the motor. SC

Issues Getting Dog-Eared?

Keep your copies safe with these handy binders

Available Aust. only. Price: $A14.95 plus $10 p&p per order (includes GST). Just fill in and mail the handy order form in this issue; or fax (02) 9939 2648; or call (02) 9939 3295 and quote your credit card number.

Buy five and get them postage free!

Advertising Index

Altronics ..... loose insert,111
Amateur Scientist CD 77
Cleverscope 10
Dyne Industries 6
Embedded Logic Solutions 25
Emona Instruments 13
Geoff Coppa 111
Grantronics 111
Hare & Forbes ..... OBC
High Profile Communications 111
Instant PCBs 111
Jaycar IFC,53-60
Keith Rippon 111
Kitstop 8
LED Sales 111
LHP.NET.AU ..... IBC
Microchip Technology 7
Mikroelektronika 11
Ocean Controls 12
Quest Electronics 111
Radio & Hobbies DVD 109
RF Modules 112
Roc-Solid 5
Sesame Electronics 111
Sethna Electronics 111
Silicon Chip Binders 112
Silicon Chip Bookshop 103
Silicon Chip Order Form 105
Silicon Chip Partshop 104
Silicon Chip Subscriptions 52
Siomar Battery Engineering 3,111
Splat Controls 111
Switchmode Power Supplies 65
Tekmark 29
Truscotts Electronic World 111
Verbatim Lights 51
Wiltronics 9
Worldwide Elect. Components 112

INFOMON SOLAR

FIXED

20W	$49
50W	$99
80W	$180
100W	$230
120W	$250
200W	$499

Infomon solar panels are the perfect choice for those who demand exceptional performance and quality. Folding solar panel kits include a carry bag, battery charge controller and cable with alligator clips.

5m

FOLDING KIT

60W	$150
80W	$199
100W	$299
120W	$350
160W	$488
200W	$499

240VAC INFOMON PURE SINEWAVE SILENT INVERTER GENERATOR

2KVA was $1599 **now $499!**
3.5KVA was $1899 **now $799!**

PORTABLE FRIDGE FREEZER

FREE BONUSES: insulation cover, wall charger & 12v cigarette adaptor. **REDUCED!**
45L was $1499 **NOW $499**
80L was $1899 **NOW $599**

INFOMON WIND TURBINE

One of the most advanced wind turbines to generate some serious power, sold as a 1kW or 2kW complete kit with a stand & rectifier.
LIMITED STOCK!
1kW $899 2kW $1999

12V DC to 240V AC +USB POWER INVERTER **1kW** reduced to **$99!**
Also available in 150w & 1000w.

1.5KW SOLAR GRID INVERTER

CEC APPROVED **$499**
Other sizes also available.

REVERSING CAMERA KIT
Includes all connection cables, 7" monitor, remote & IR camera
was $189 **REDUCED TO (wireless kit: $199) $99!**

CCTV CAMERA
IR NIGHT VISION WATERPROOF COLOUR
$20

BATTERY CHARGE CONTROLLERS
wide range from **$35!**

150 PSI Heavy Duty AIR COMPRESSOR 150L/min $99!

4.2ton JACK
48" 60"
EXHAUST/HI LIFT JACKS starting from $99

10.2" ANDROID TABLET $199!

ELECTRIC WINCH
12000 lbs wireless remote **$499!**
synthetic rope option available $799

$189!
NEW WIRELESS POWER MINI WINCH KIT

12vdc LED Bright Lights
5m strip, cuttable to length **$49**

HEATED HYDRO THERAPY SPA

- Computer control touch pad (60+ jets)
- Complete with pumps, filtration system
- Radion heater + recliner head rests
- Available in modern white interior polish
- 100% AUSTRALIAN OWNED company
- 100% AUSTRALIAN APPROVED

WAS $8899
CLEARANCE SALE $3899

NEW THERAPEUTIC INFRARED SAUNA
WAS $2599
NOW ONLY **$999**

125cc
$499
$899

www.lhp.net.au
02 9620 9011

WWW.LHP.NET.AU - 02 9620 9011

OVERLOAD DEALS!

DIGITAL CALIPERS

NEW PRODUCT

- Accuracy DIN862
- Large clear LCD screen
- Splash proof electronic unit
- Four way measurement

150mm/6" $89 (D180)
200mm/8" $115 (D181)
300mm/12" $169 (D182)

INDUSTRIAL DRILL SET

- 51 piece metric 1-6mm (x 0.1mm steps)
- Precision ground flutes
- HSS M2 bright finish
- 118° split point centre

$89 (D128S)

CENTRE PUNCHES

- 3 piece set: 2.5, 5.5, 7.0mm (P367)
- Automatic punch (P368)

NEW PRODUCT

$18 (P367)
$9 (P368)

DIGITAL HEIGHT GAUGE

- Horizontal & vertical measuring
- Hole depth measuring 50.8mm
- 50.8mm wide aperture
- Digital reading mm, inches & fractions

NEW PRODUCT

$24 (W614)

RE-THREADING TAP & DIE KIT

- 42 piece metric, UNC, UNF
- All taps and dies are hex shaped for use with a socket or wrench
- Contents: covering all M6-M12, 1/4"-5/8" coarse & fine thread
- Includes 2 thread files

$89 (T023)

EDBD-13 DRILL SHARPENER

- Economy drill bit sharpener
- Capable of split point sharpening
- Grinds two flute drills of unlimited length
- 80W 4200rpm 240V DC motor
- 3-13mm capacity
- 118° drill angle

$109 (D070)

SURFACE MARKING OUT GAUGE

- 225 & 300mm spindles
- Includes scriber
- A fully hardened and ground base which serves as an accurate reference surface

NEW PRODUCT

$49 (M053)

METRIC/IMPERIAL DRILL GAUGE

- Stainless steel
- 1-13mm
- 1/16 - 1/2"

NEW PRODUCT

$15 (M388)

ORDER NOW!

USE PROMO CODE: CURRENT
TO RECEIVE THESE SPECIAL PRICES
ONLINE OR INSTORE!

DEBURRING TOOL SET

- 23 piece universal set • Edges sheet metal
- Includes: 2 burr holders, sheet metal burr, 10 pack HSS blades, 20mm countersink blade, 2 scraper blades, "V" & inverted "V" scraper, 4 telescopic extensions & wrenches

$99 (D055)

ENGINEERS FILES

- 250mm length files

TYPE	GRADE	Price	CODE
Flat	Coarse	$12	(F120)
Flat	Second Cut	$12	(F121)
Flat	Smooth	$12	(F122)
Half Round	Coarse	$12	(F124)
Half Round	Second Cut	$12	(F125)
Half Round	Smooth	$12	(F126)
Round	Coarse	$12	(F127)
Round	Second Cut	$12	(F128)
Round	Smooth	$12	(F129)

SECOND CUT ENGINEERS FILE SET

- Cushion grip handles
- Flat, round, 1/2 round, square & triangular
- 200 file length

$29 (F100)

SHEET METAL STEP DRILL SET

- HSS M2 bright finish
- For drilling holes in thin material
- Sizes:
  - 4-12mm x 1mm
  - 6-20mm x 2mm
  - 6-30mm x 2mm

$70 (D107T)

BURR SETS - 5 piece

- Solid carbide burr
- 3/8" & 1/2" heads
- Double cut burrs
- 1/4" shanks

1 1/2" Shank Length SD-3, SE-3, SA-3, SC-3, SF-3 $79 (B903)
6" Shank Length SD-3, SD-5, SG-5, SC-5, SF-5 $90 (B905)

Deco Flex 400mm SCROLL SAW

- 90W / 240V variable speed motor
- 167/400mm throat capacity
- Aluminium tilt table 0-45º
- 28mm dust collector port

$165 (W348)

HARDWARE ASSORTMENT PACKS

BoxTac®

No.	Assortment	CODE	Price
01	196 Piece Hex Cap Screw	K72024	$15
02	224 Piece Stainless Steel Nut & Bolt	K72062	$25
03	141 Piece Sealing Washer	K72090	$15
04	40 Piece Hose Clamp	K72140	$15
05	225 Piece Metric Nitrile O-Ring	K72168	$15
06	225 Piece SAE Nitrile O-Ring	K72169	$15
07	120 Piece Roll Pin	K72204	$15
08	60 Piece Metric Key Steel	K72310	$15
09	60 Piece SAE Key Steel	K72312	$15
10	80 Piece Woodruff Key	K72316	$15
11	150 Piece Nylon Lock Nut	K72450	$15
12	790 Flat & Spring Washer	K72116	$15
13	175 Spring & Hitch Pin	K72712	$15
14	50 Piece Lynch Pin	K74122	$25
15	382 Piece SAE O-Ring	K74146	$25
16	397 Piece Metric O-Ring	K74150	$25
17	50 Piece Hydraulic Grease Fittings	K74234	$15
18	362 Piece Machine Screw	K74368	$25
19	300 Piece External Snap Ring	K74378	$15
20	300 Piece Internal Snap Ring	K74384	$15
21	150 Piece Set Screw	K74444	$15
22	125 Piece Grommet	K74702	$15

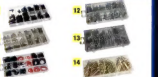

TOOLING CABINET WORKSTATION

- Drawer capacity 100kg each
- 1170 x 580 x 1450mm (W x D x H)
- Portable on caster wheels
- Key lockable drawers & cupboard
- 950mm work bench height

$895 (T773)

bts 900x BELT & DISC LINISHER

- Quick release for belt change
- Linishing work area 100 x 280mm
- Ø150mm disc
- Includes mitre guide
- 370W 240V induction motor

$189 (L105)

Specifications & Prices are subject to change without notification. All prices include GST and valid until 29-05-12

HARE&FORBES MACHINERY HOUSE

NSW (02) 9890 9111 1/2 Windsor Rd, Northmead
QLD (07) 3274 4222 626 Boundary Rd, Coopers Plains
VIC (03) 9212 4422 1 Fowler Rd, Dandenong
WA (08) 9373 9999 41-43 Abernethy Rd, Belmont

www.machineryhouse.com.au

S.SC.05812